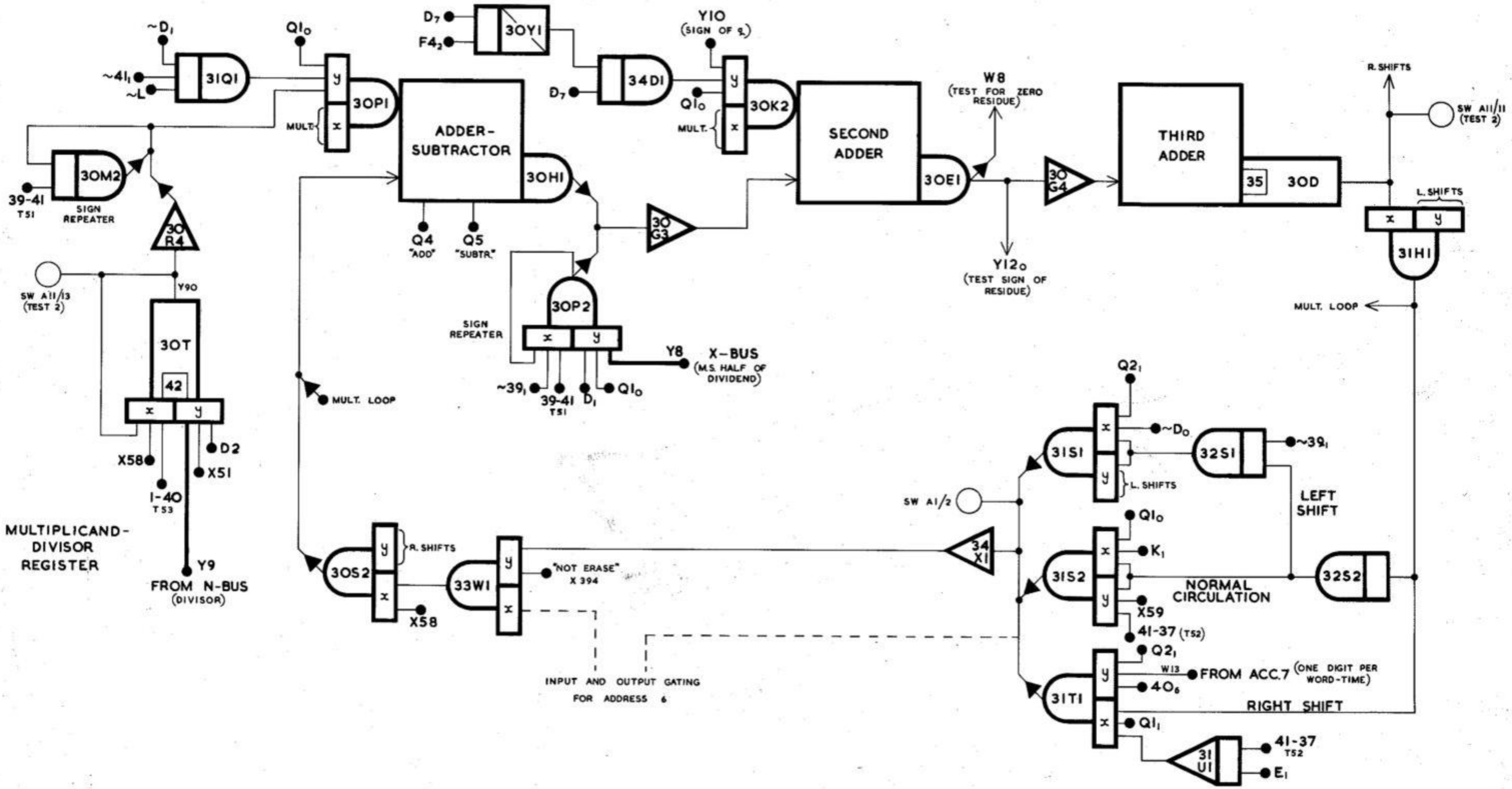

FIG. 14. 3 ACCUMULATOR 6 IN DIVISION