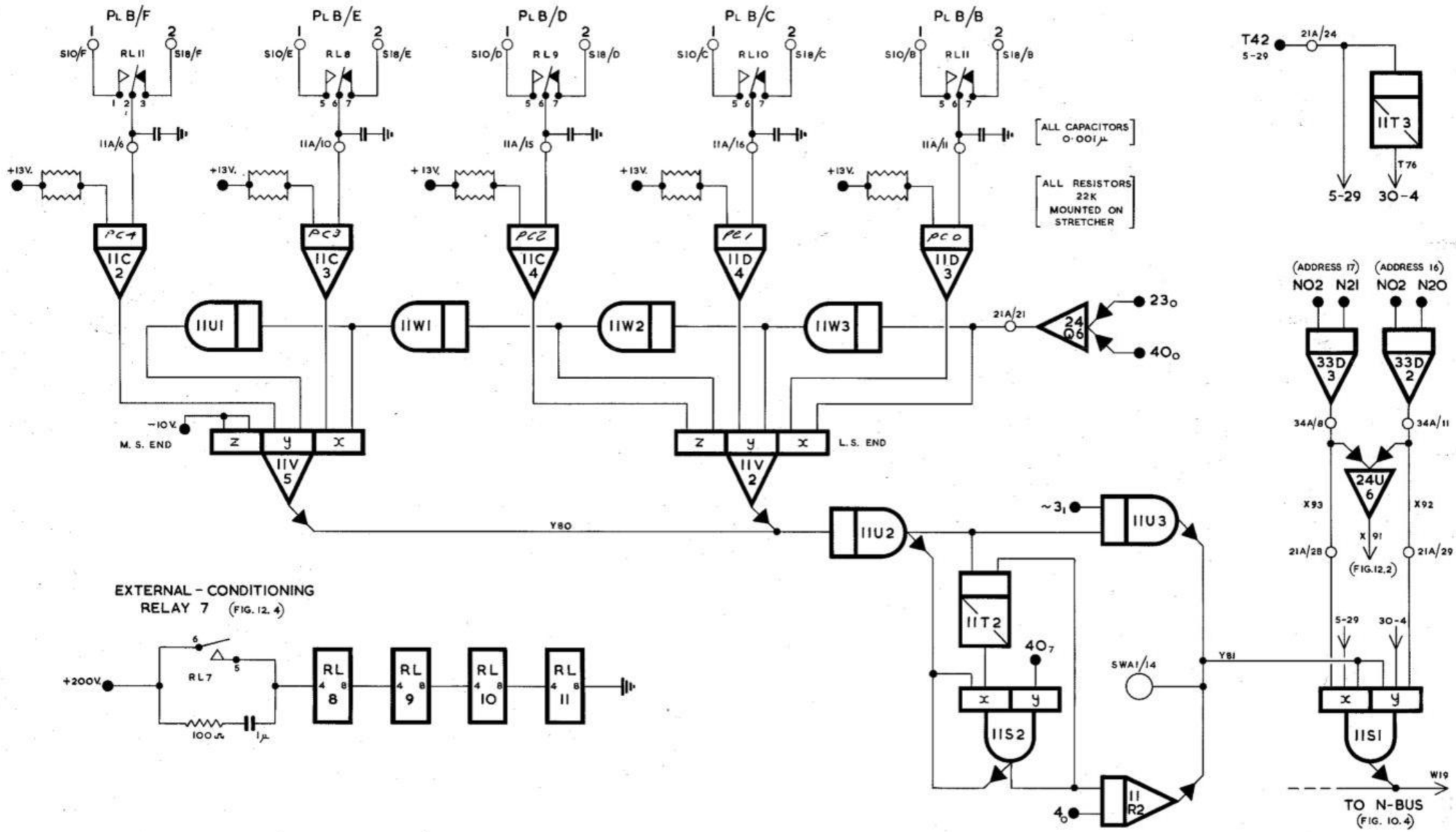

FIG. 12. 1 INPUT FROM TAPE READERS