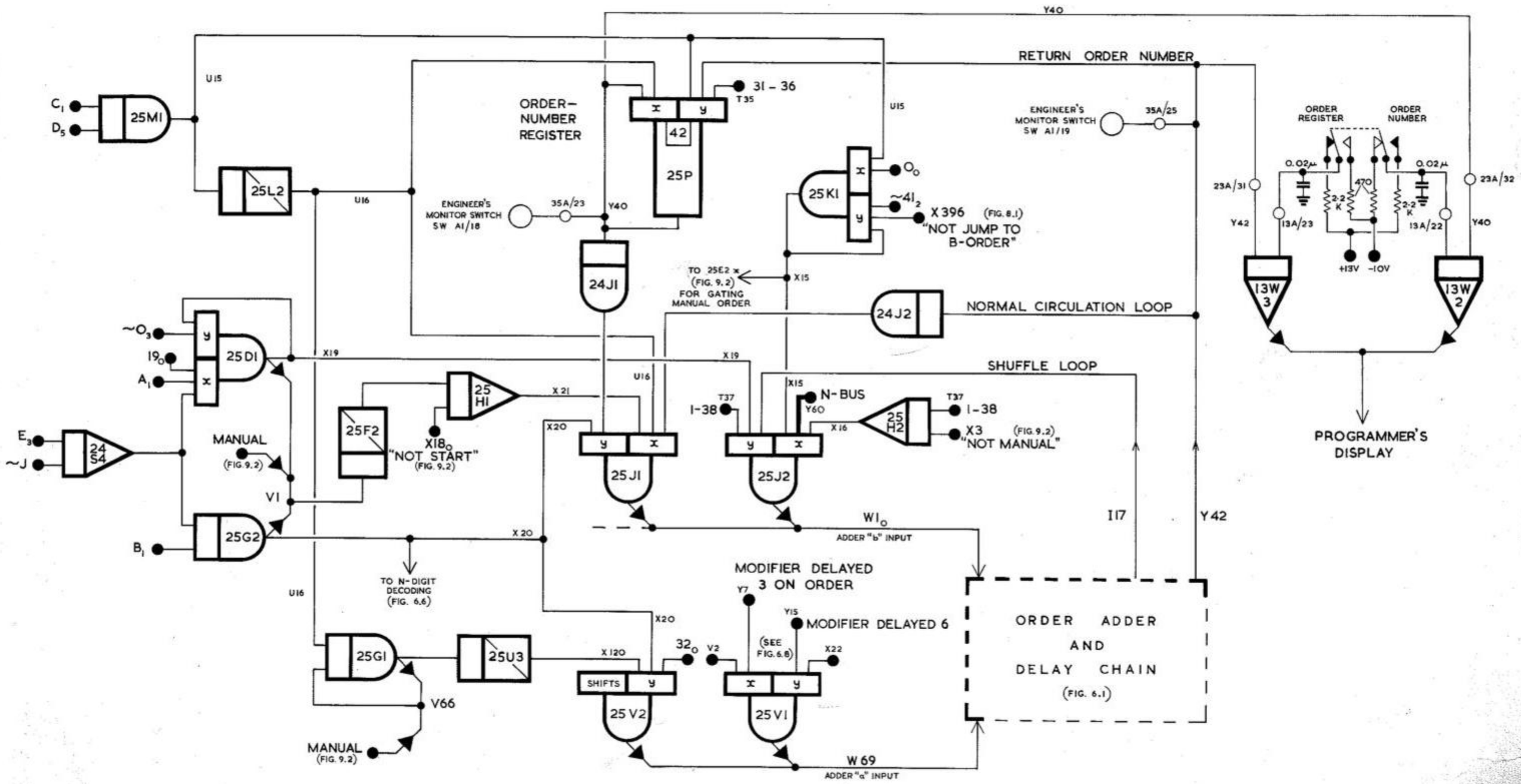

FIG. 6.2 NORMAL ENTRIES TO THE ORDER REGISTER.