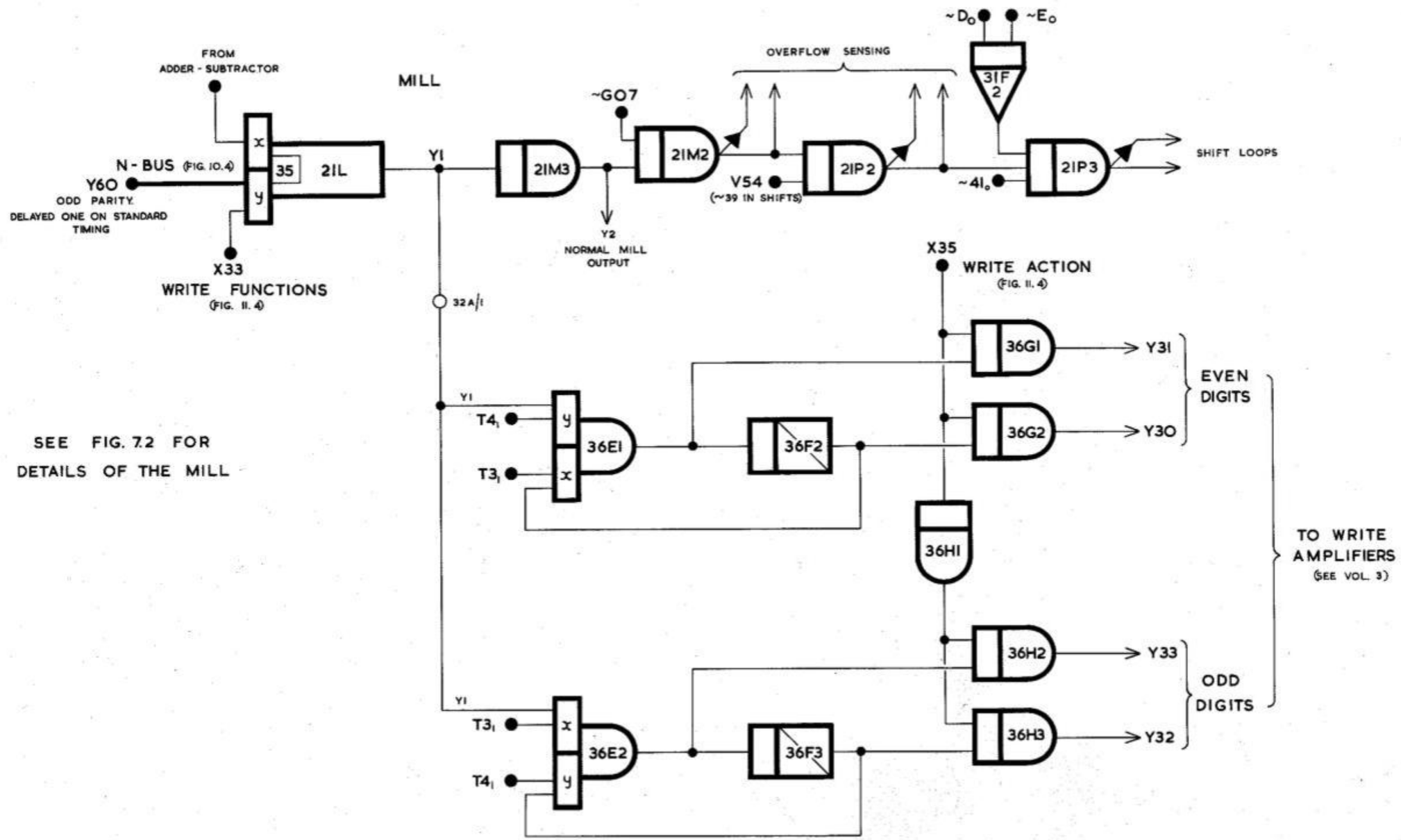

FIG. 11.5. ROUTING IN DRUM - WRITE ORDERS