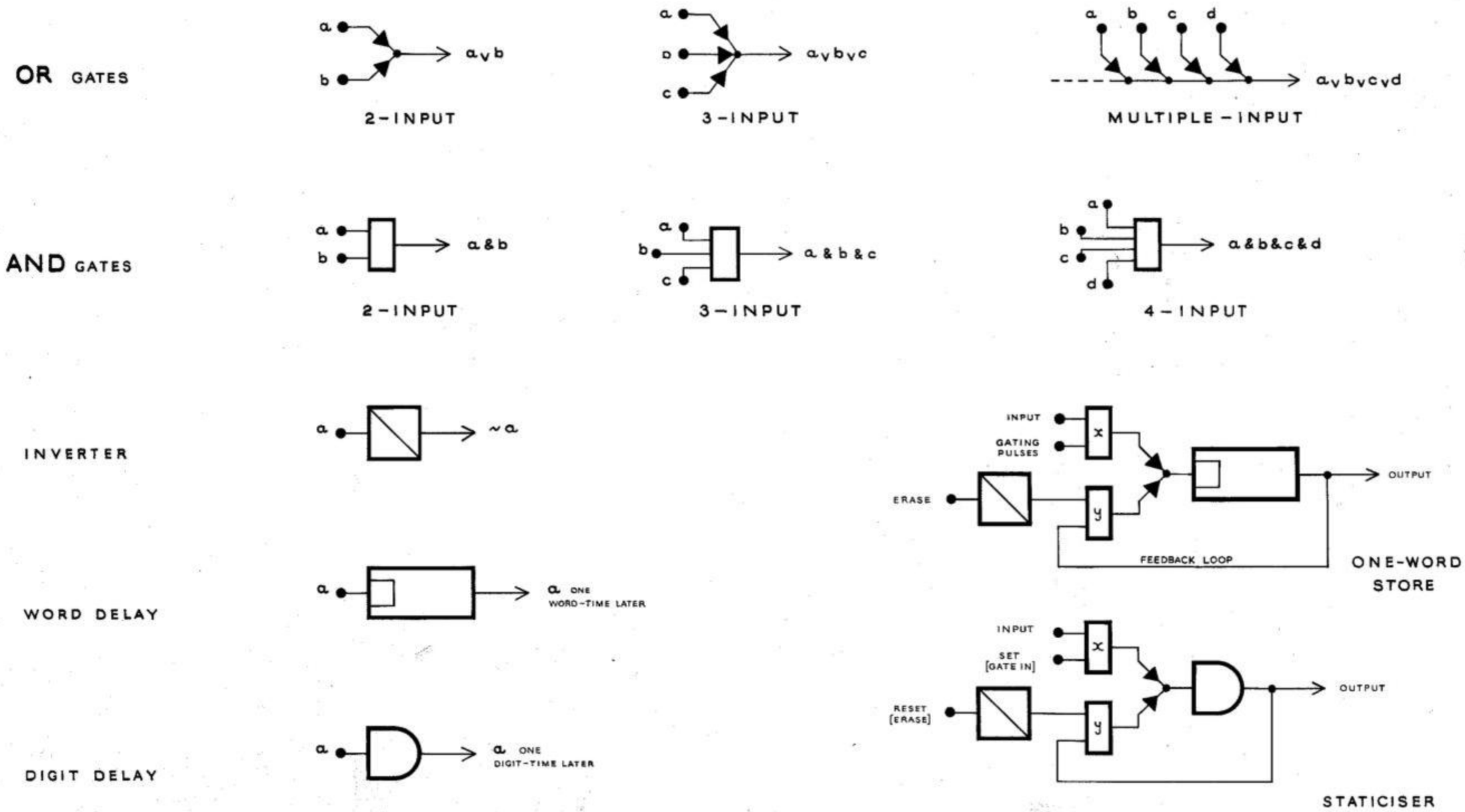

FIG. 3.1 LOGICAL ELEMENTS