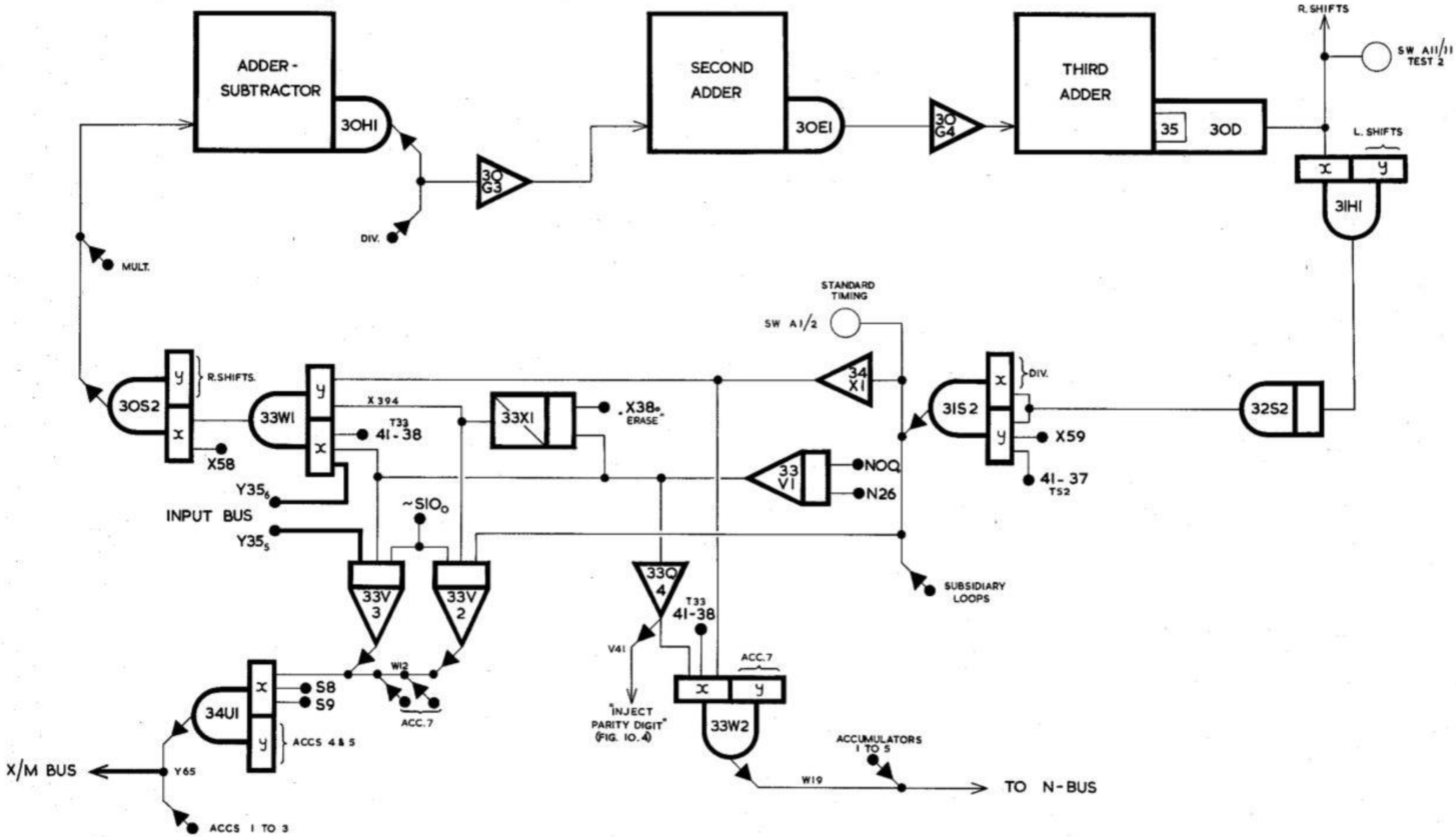

FIG. 15.1 STORAGE IN ADDRESS 6