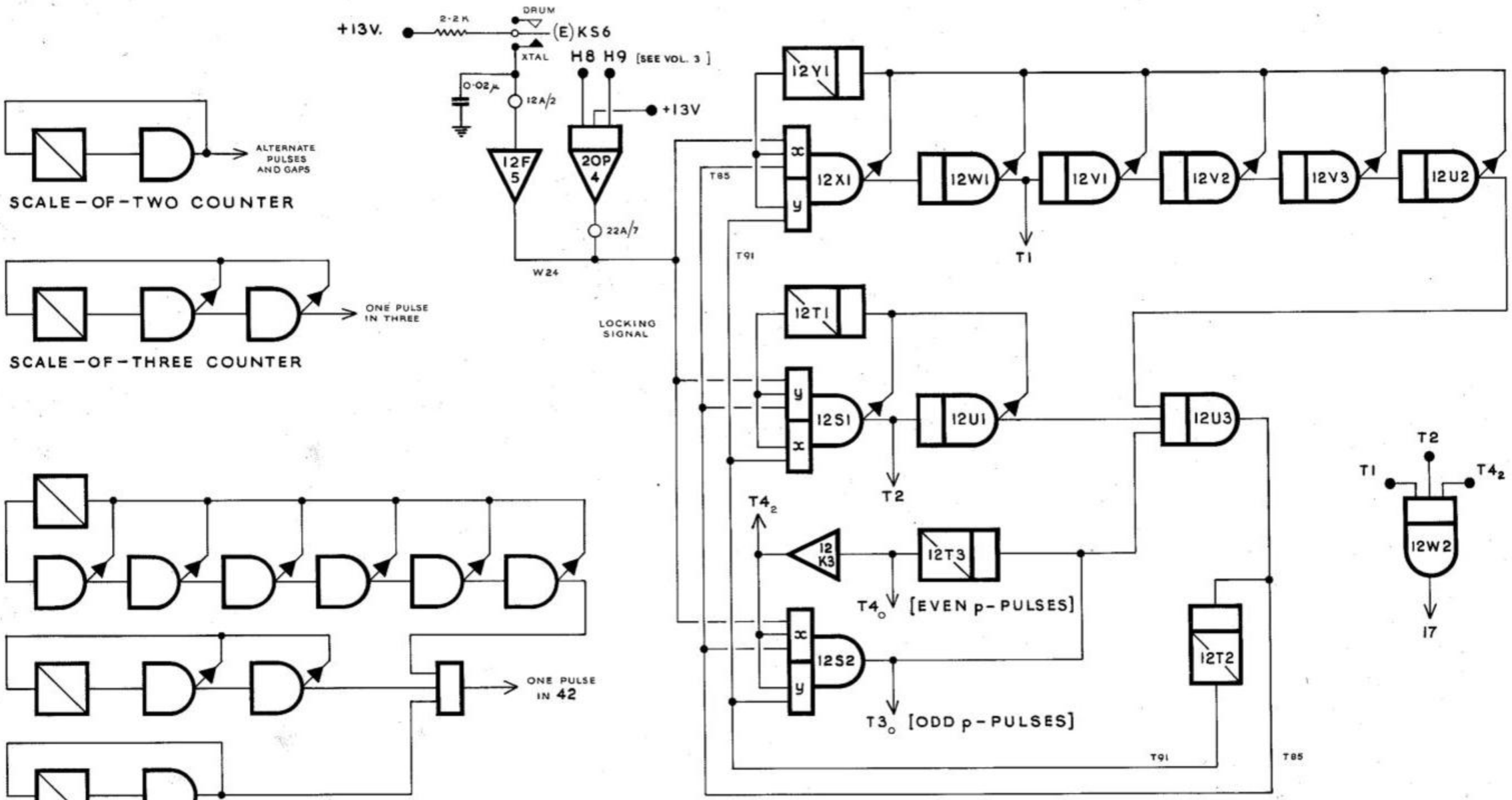
+13V.
2·2K
DRUM
(E)KS6
XTAL
H8 H9 [SEE VOL. 3]
0·02μ
12A/2
+13V
12F 5
20P 4
22A/7
W24
T85
T91
LOCKING SIGNAL
12Y1
12X1
12W1
12V1
12V2
12V3
12U2
T1
12T1
12S1
12U1
12U3
T2
T4₂
12 K3
12T3
T4₀ [EVEN p-PULSES]
12S2
12T2
T3₀ [ODD p-PULSES]
T1
T2
T4₂
12W2
17
ALTERNATE PULSES AND GAPS
SCALE-OF-TWO COUNTER
ONE PULSE IN THREE
SCALE-OF-THREE COUNTER
ONE PULSE IN 42
BASIC COMMUTATOR
COMPLETE COMMUTATOR

FIG. 5.1