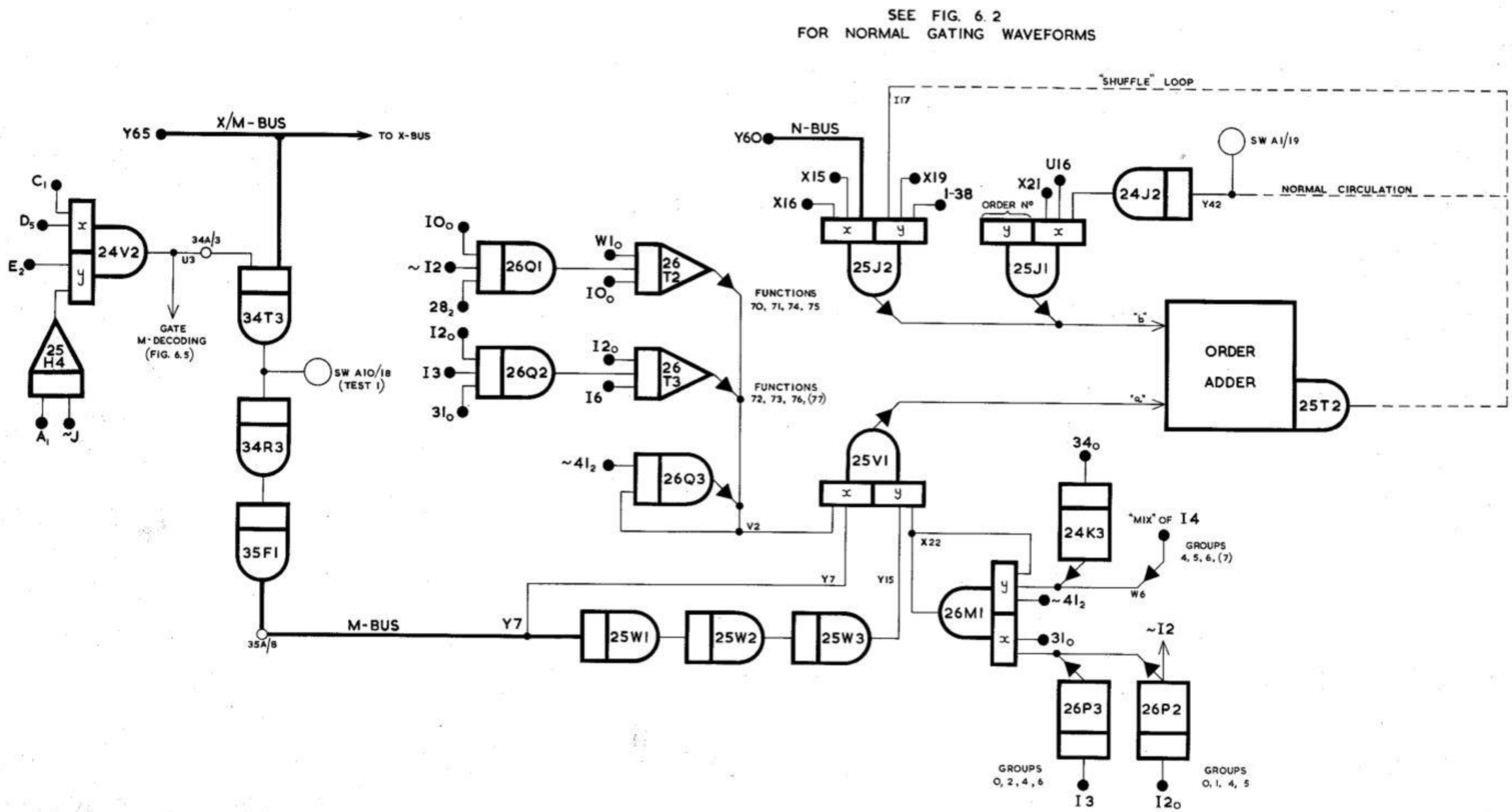

FIG. 6. 8 CONTROL OF MODIFICATION