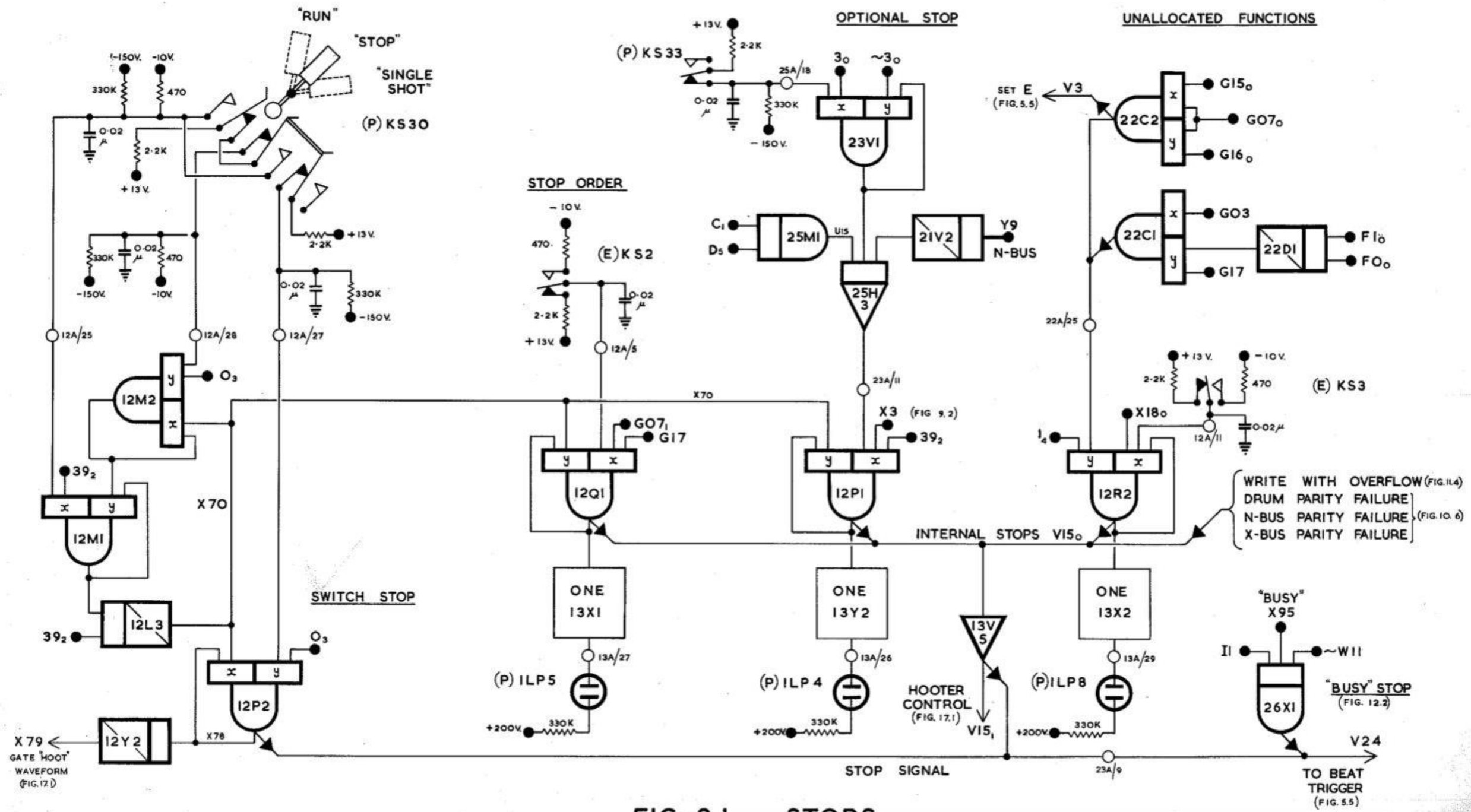
"RUN"
"STOP"
"SINGLE SHOT"
(P) KS30
-150V.
-10V.
330K
470
0·02 μ
2·2K
+13V.
12A/25
12A/26
12A/27
12M2
12M1
12L3
12P2
12Y2
X70
X78
X79
GATE "HOOT" WAVEFORM (FIG. 17.1)
SWITCH STOP
STOP ORDER
(E) KS2
12A/5
OPTIONAL STOP
(P) KS33
25A/18
23V1
25M1
U15
25H 3
21V2
Y9
N-BUS
23A/11
X3 (FIG 9.2)
12Q1
12P1
12R2
ONE 13X1
ONE 13Y2
ONE 13X2
13A/27
13A/26
13A/29
(P) ILP5
(P) ILP4
(P) ILP8
+200V.
13V 5
HOOTER CONTROL (FIG. 17.1)
V15₁
INTERNAL STOPS V15₀
STOP SIGNAL
23A/9
UNALLOCATED FUNCTIONS
SET E (FIG. 5.5)
V3
22C2
22C1
22D1
22A/25
G15₀
G07₀
G16₀
G03
G17
F1₀
F0₀
(E) KS3
12A/11
X18₀
WRITE WITH OVERFLOW (FIG. 11.4)
DRUM PARITY FAILURE
N-BUS PARITY FAILURE
X-BUS PARITY FAILURE
(FIG. 10.6)
"BUSY" X95
26X1
"BUSY" STOP (FIG. 12.2)
V24
TO BEAT TRIGGER (FIG. 5.5)

FIG. 9.1 STOPS