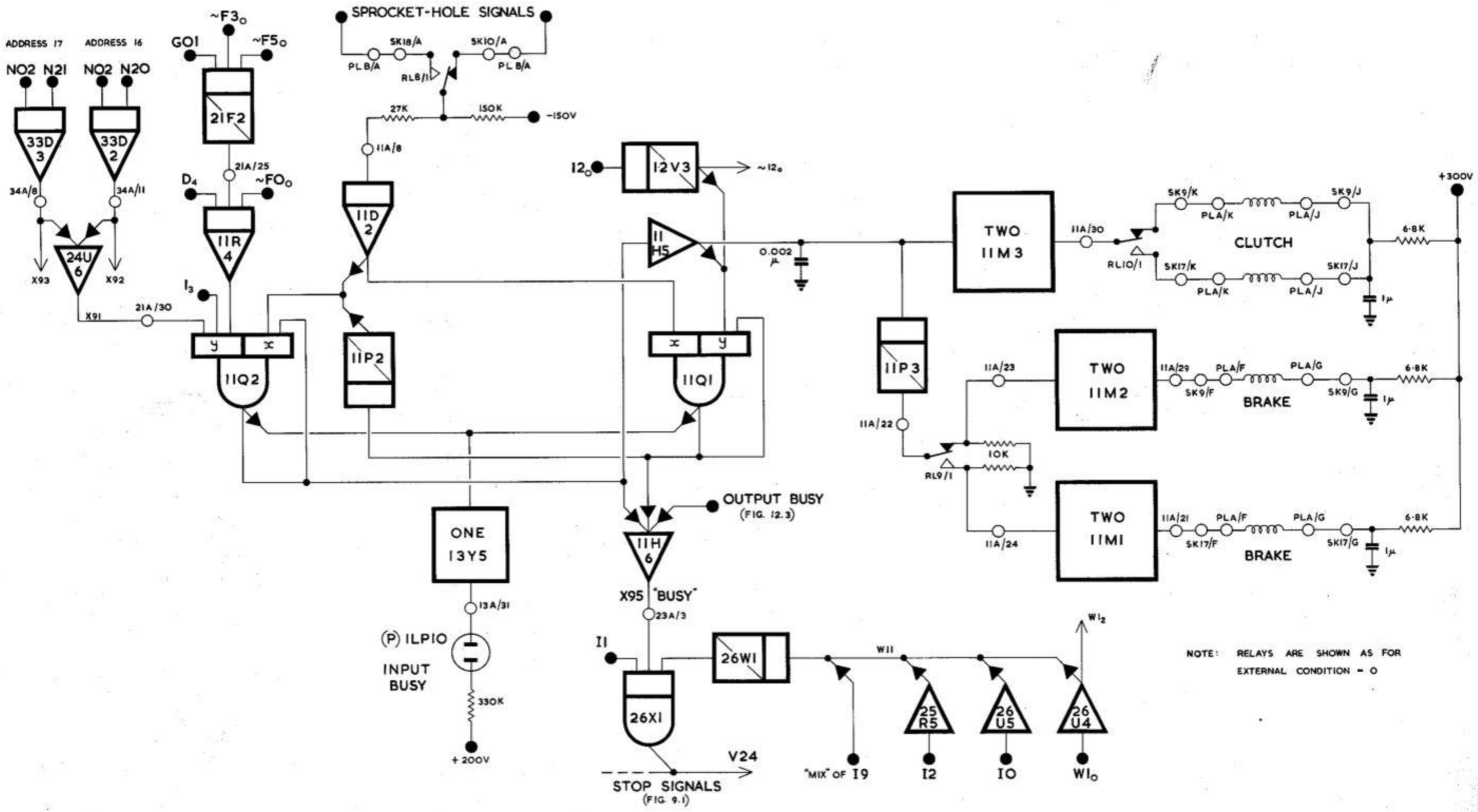

FIG. 12. 2 INPUT TAPE - DRIVE CONTROL