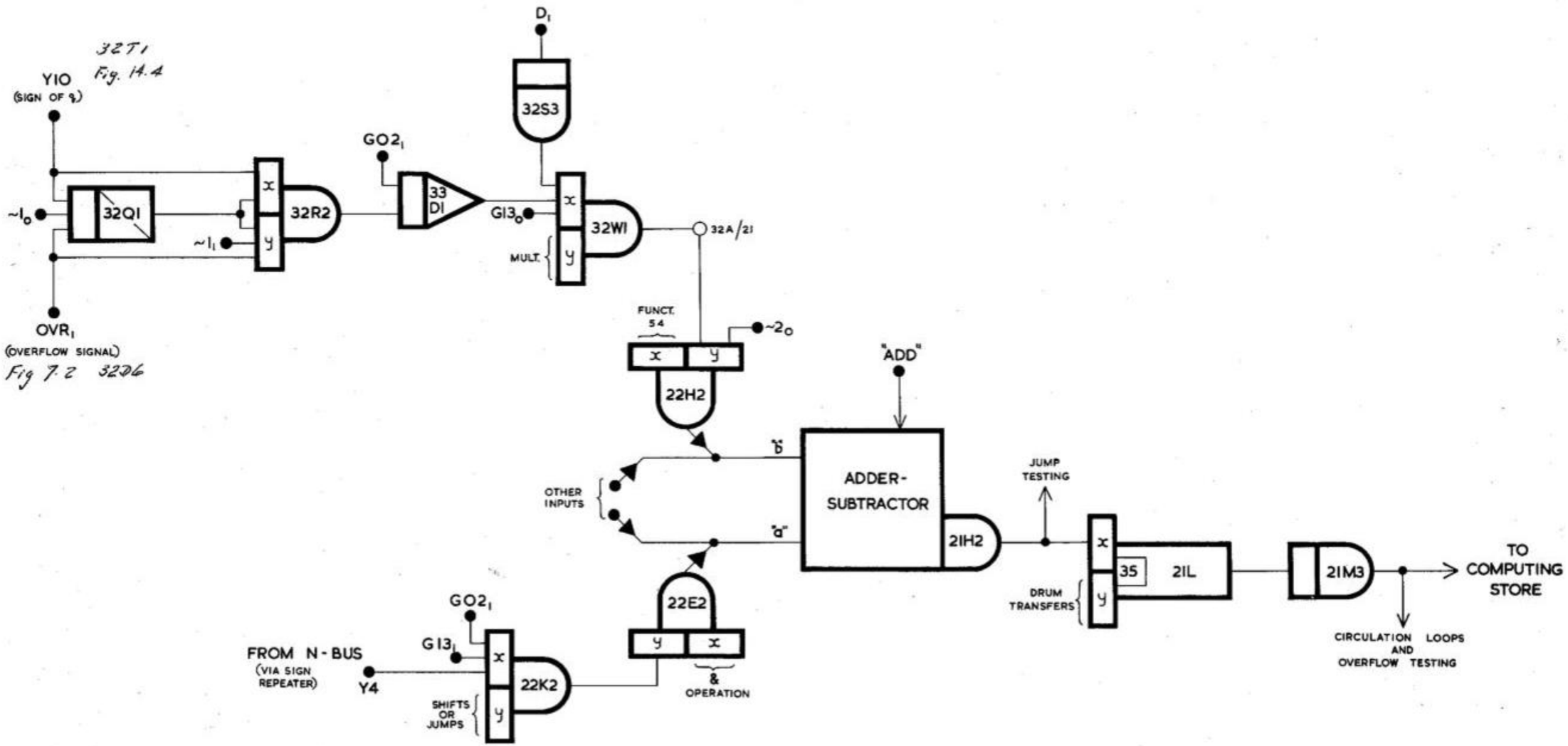

FIG. 15.3 MILL CONNECTIONS FOR JUSTIFICATION.