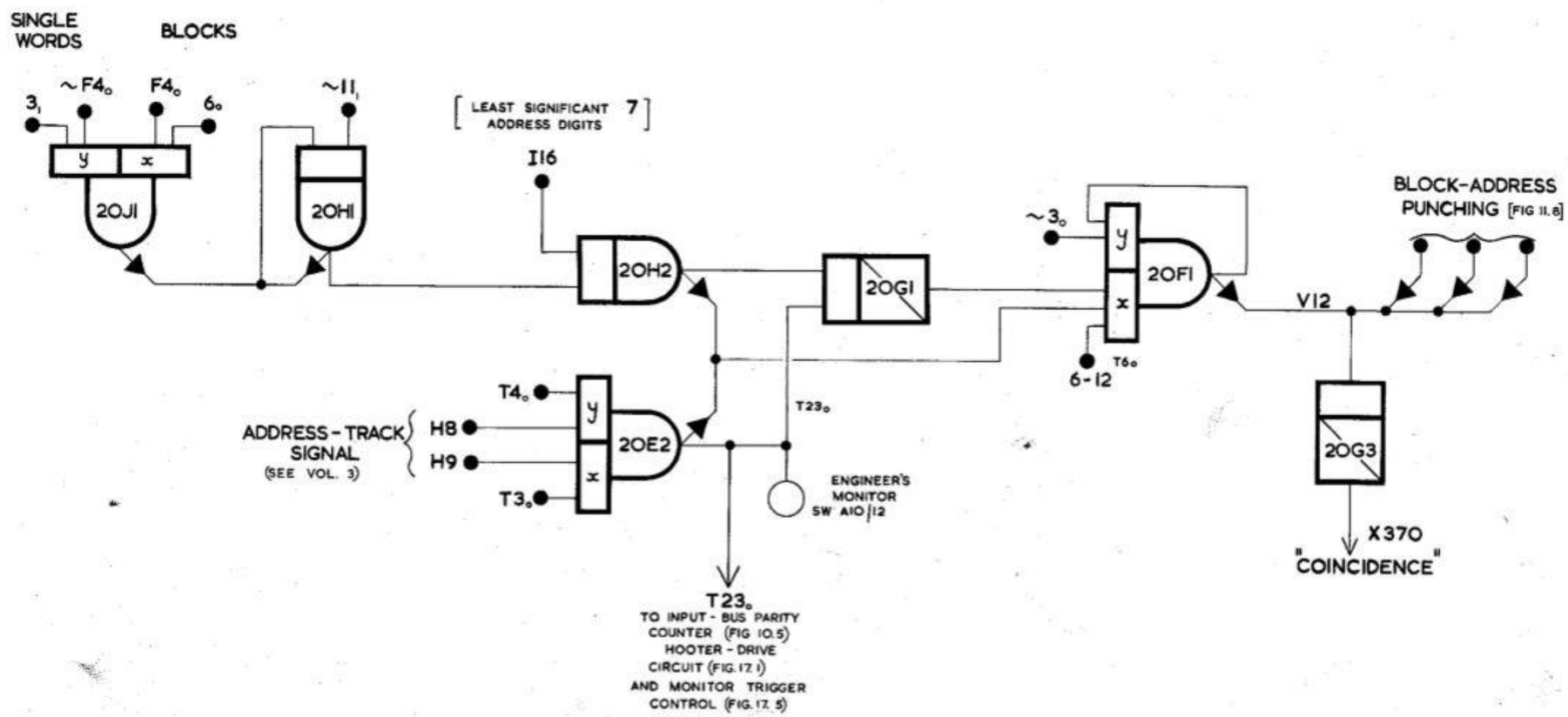

FIG. 11.3 COINCIDENCE CIRCUIT