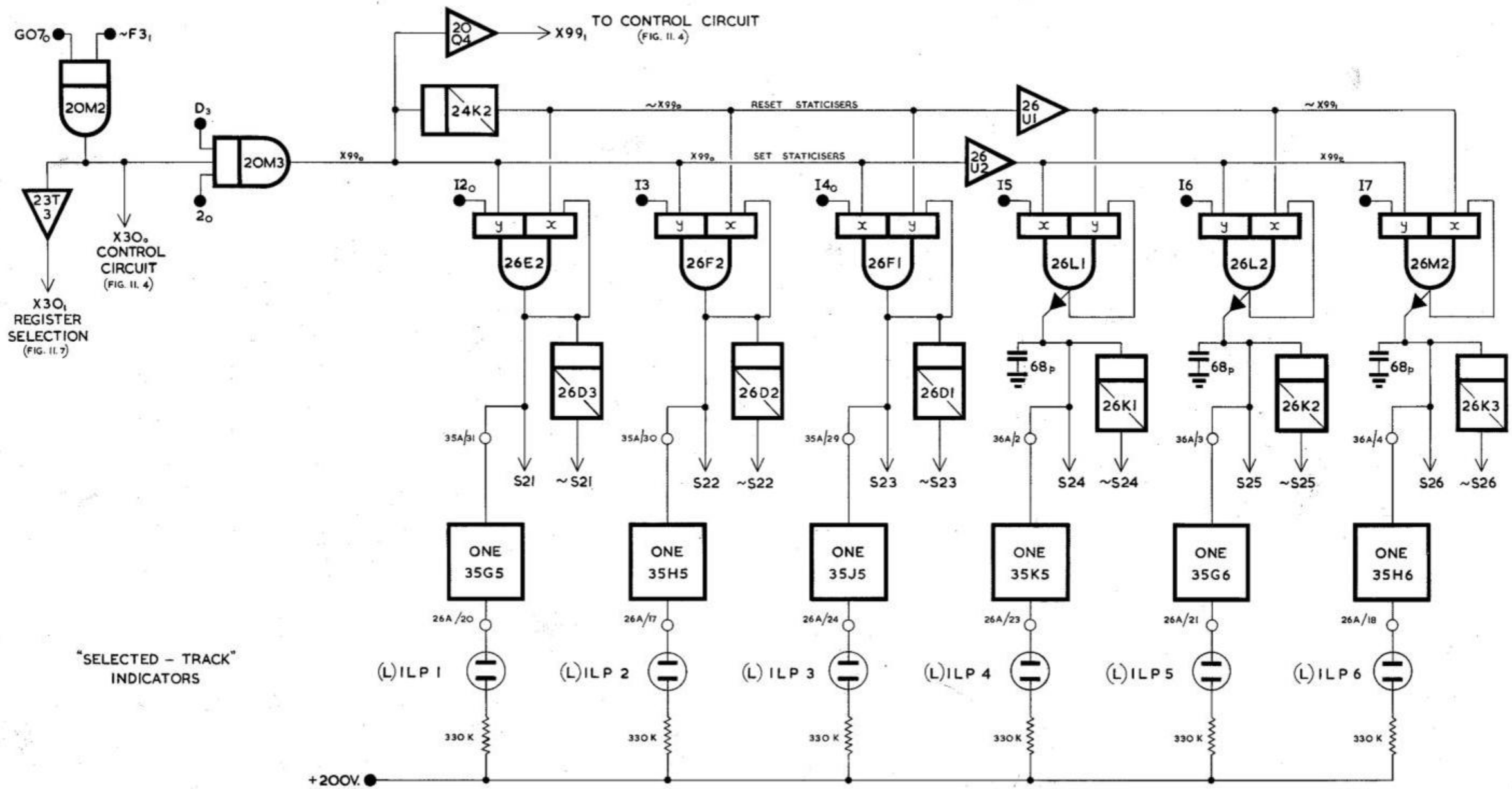

FIG. 11. 1 TRACK - SELECTION DECODING