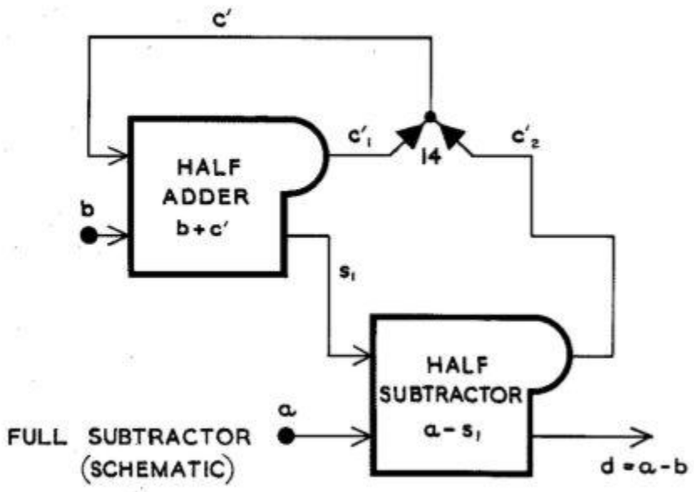

FULL SUBTRACTOR (SCHEMATIC)

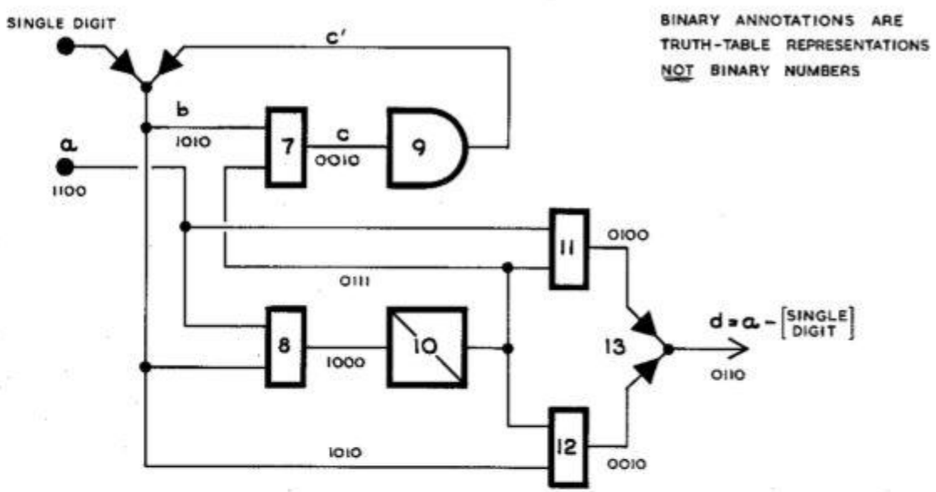

BINARY ANNOTATIONS ARE TRUTH-TABLE REPRESENTATIONS NOT BINARY NUMBERS

HALF SUBTRACTOR

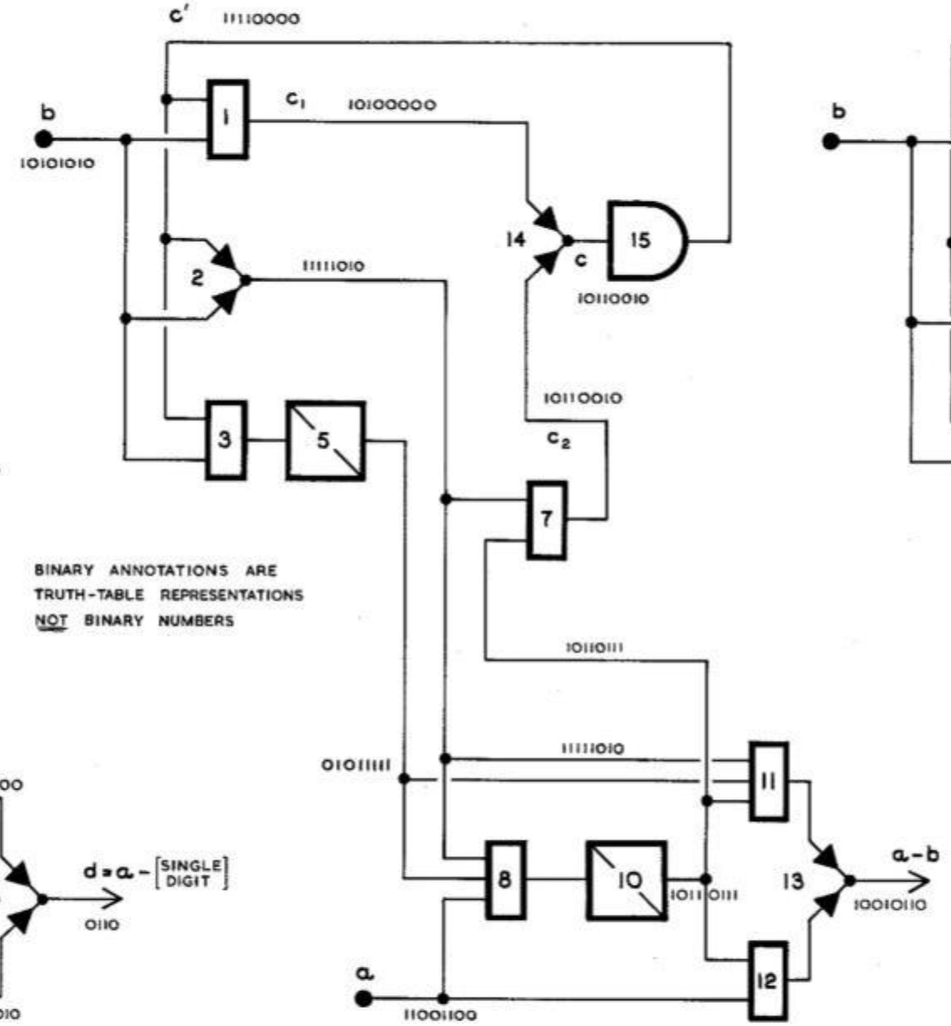

FULL SUBTRACTOR

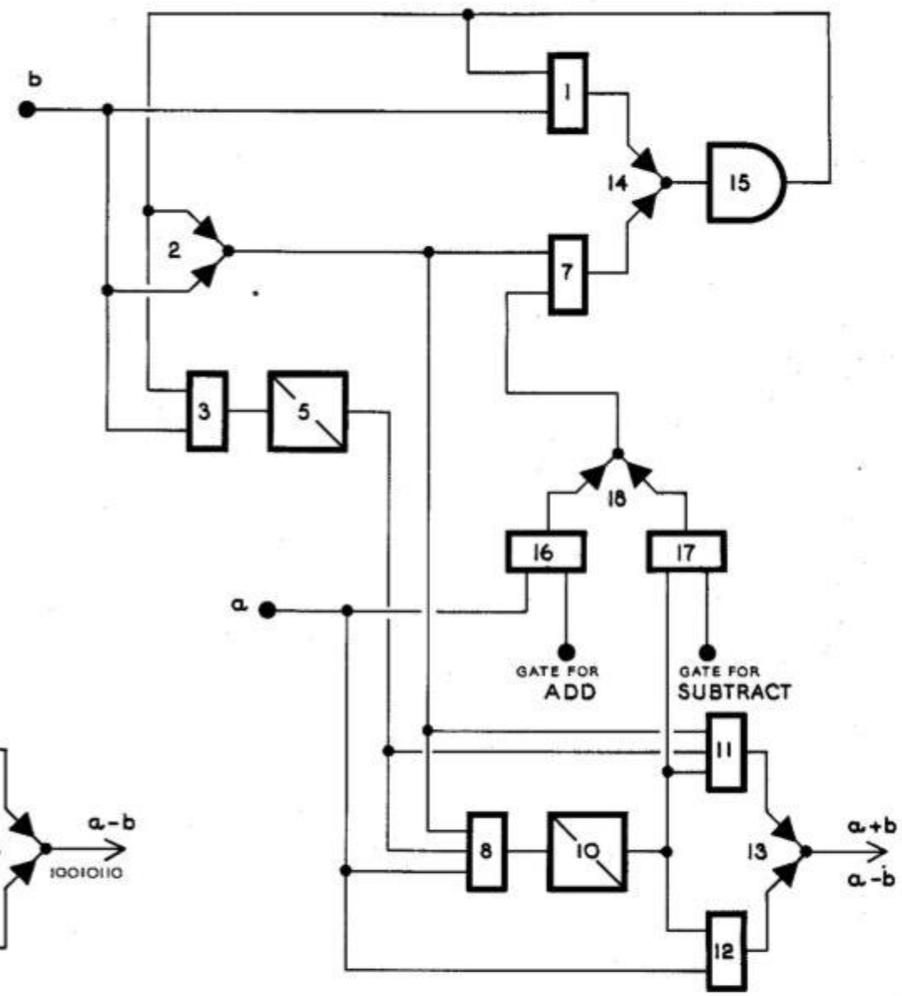

ADDER-SUBTRACTOR

FIG. 3.4