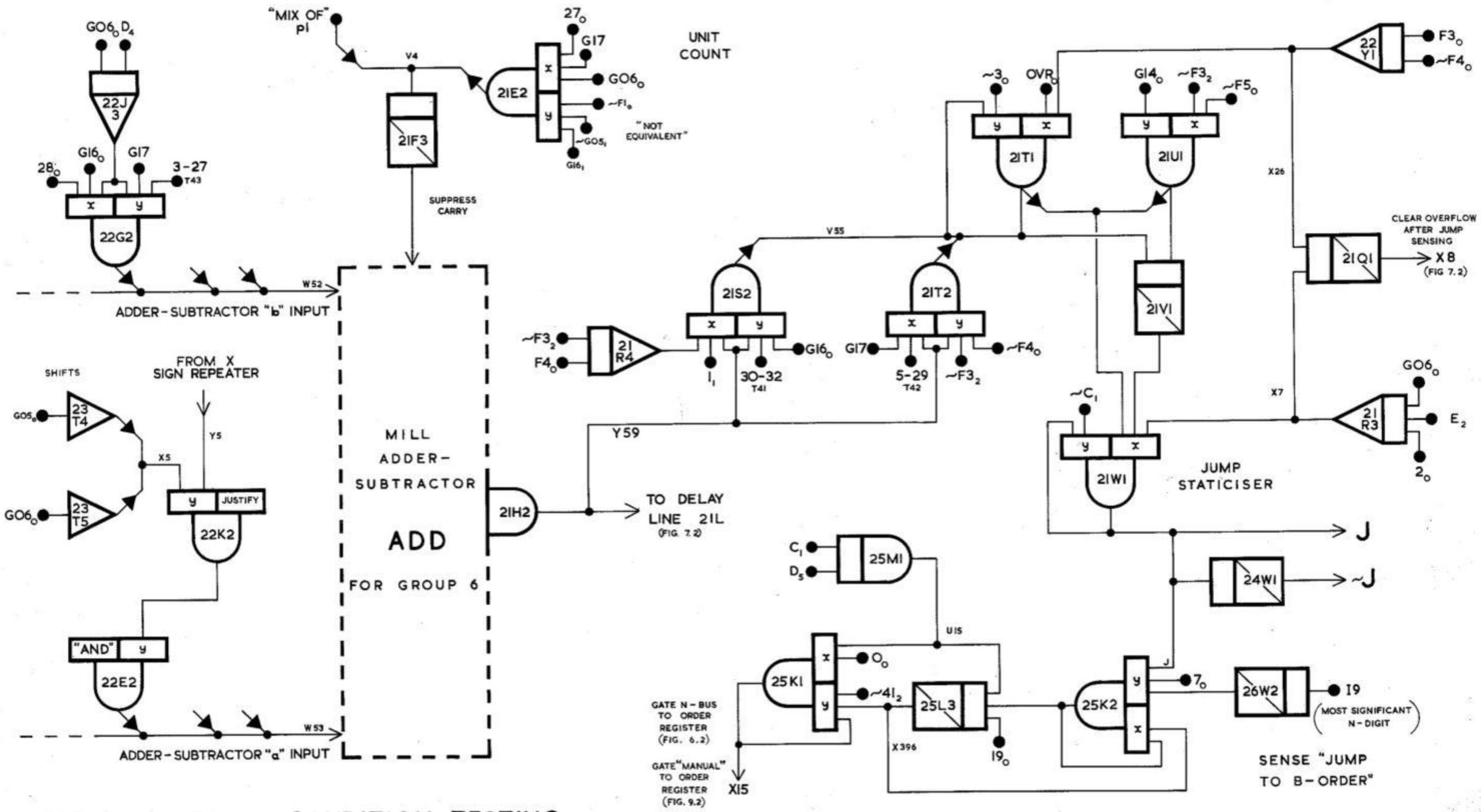

FIG. 8.1 JUMP - CONDITION TESTING