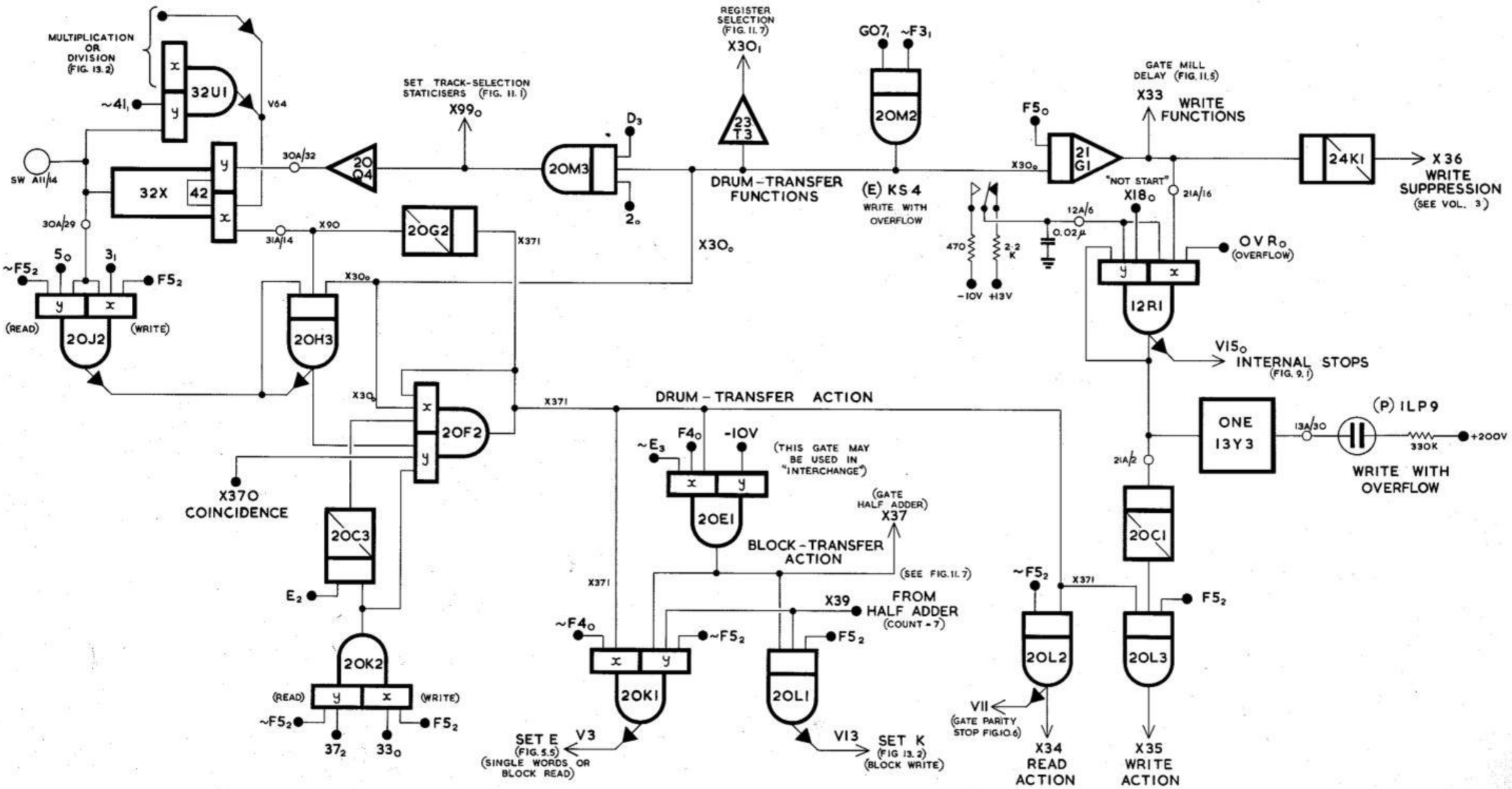

FIG. 11. 4 CONTROL CIRCUIT FOR DRUM TRANSFERS