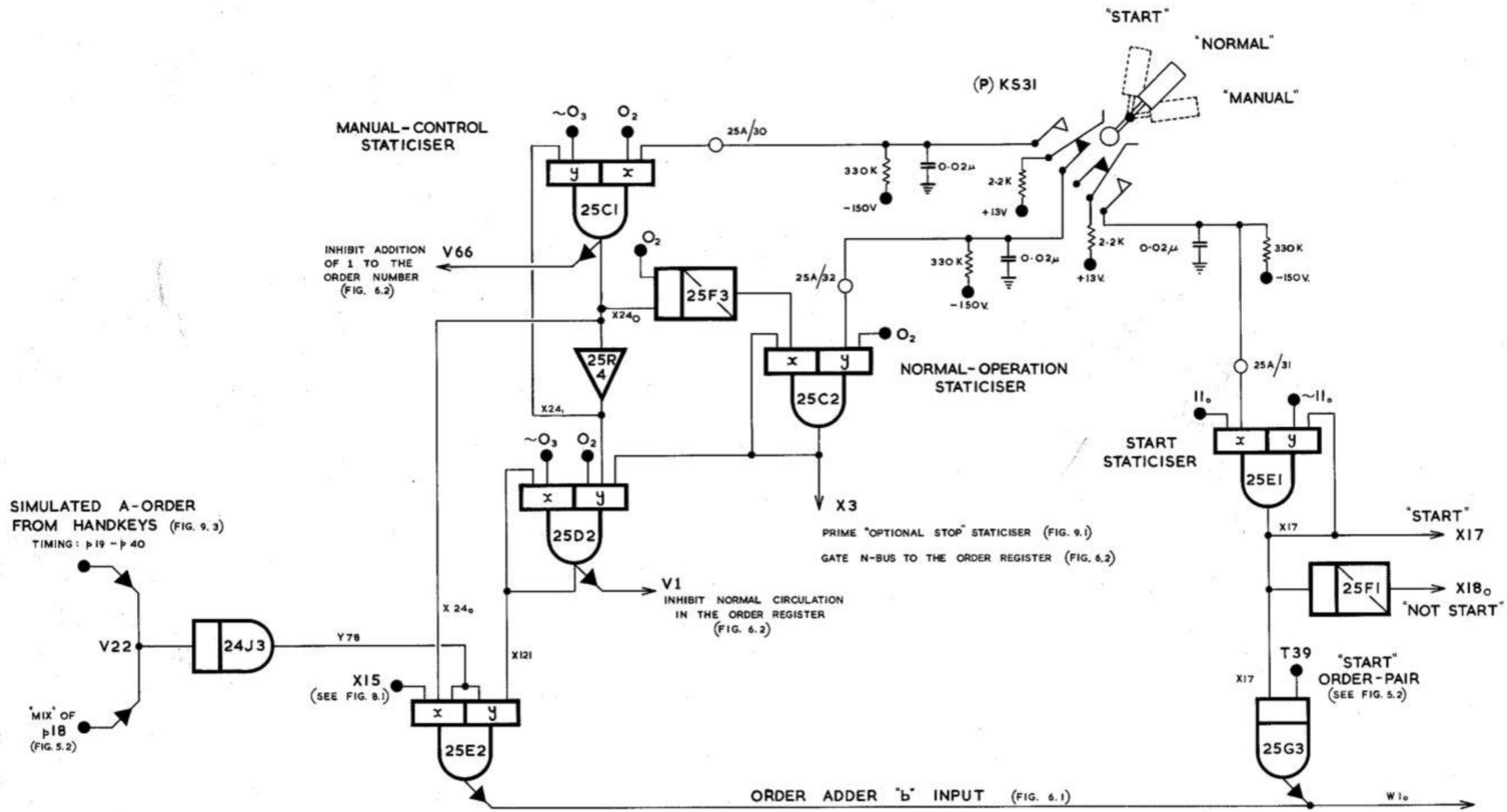

MANUAL ORDER

FIG. 9.2

"START" ORDER