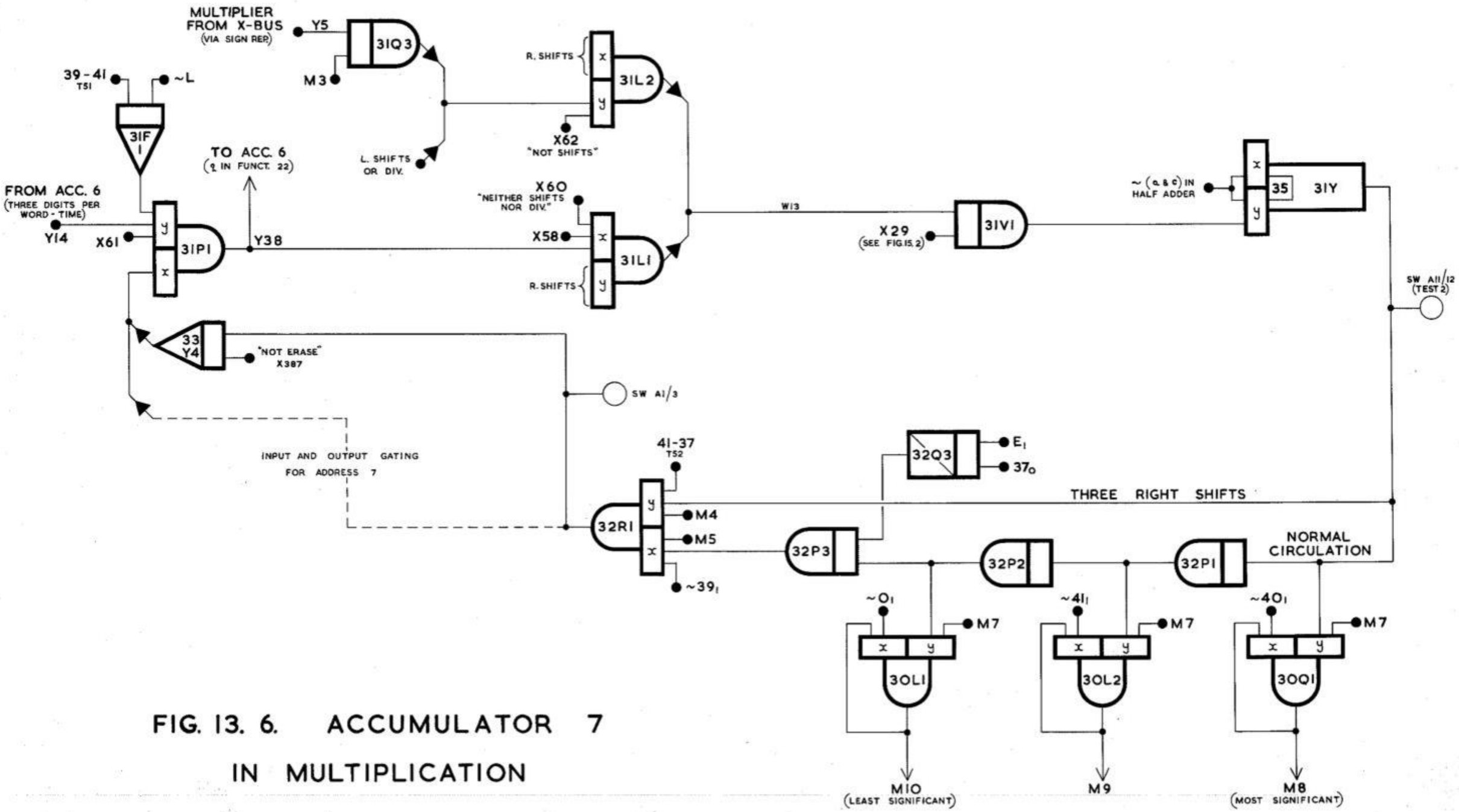

FIG. 13. 6. ACCUMULATOR 7 IN MULTIPLICATION