COLUMN - SELECTION WAVEFORMS.

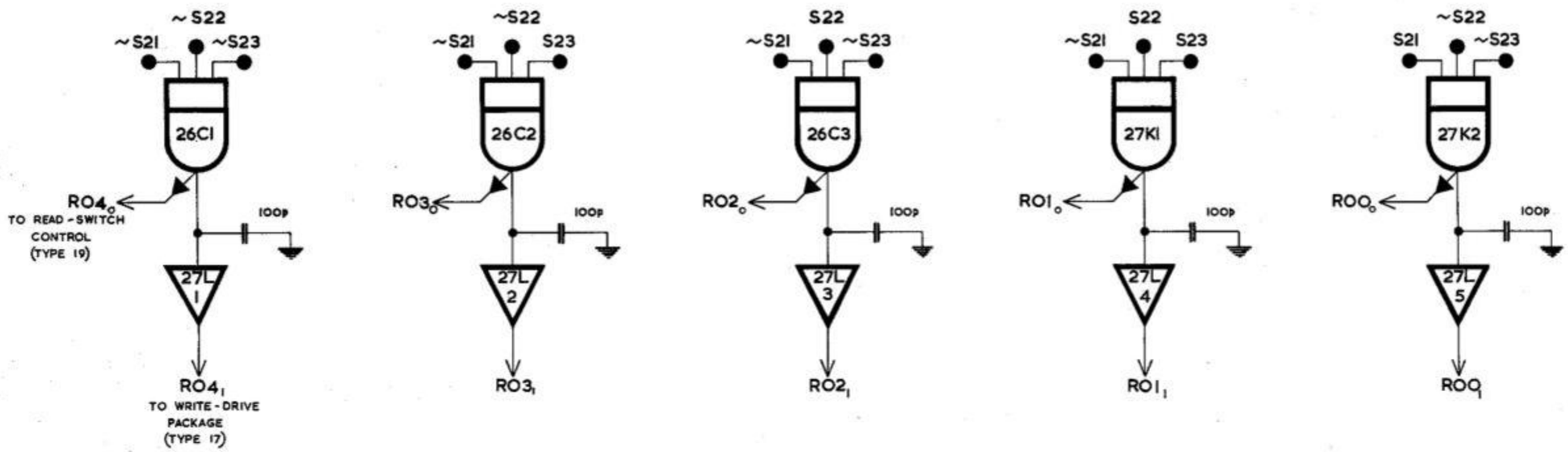

ROW - SELECTION WAVEFORMS.

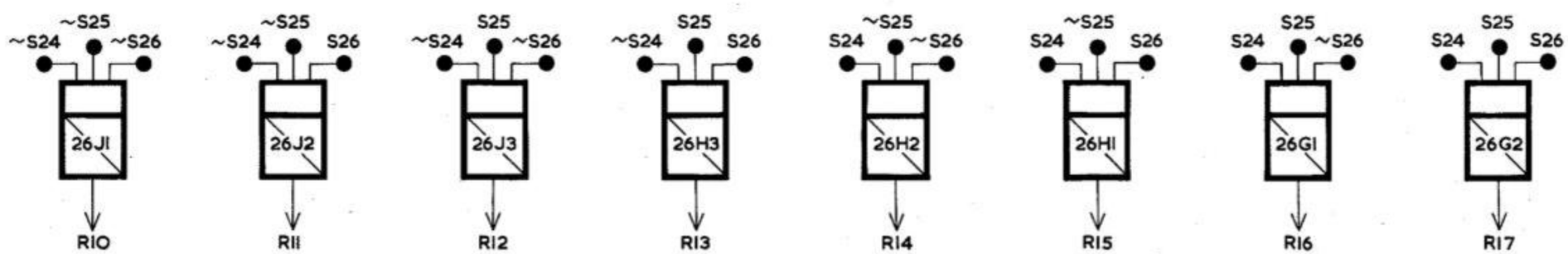

FIG. 11.2 TRACK - SELECTION CONTROLS