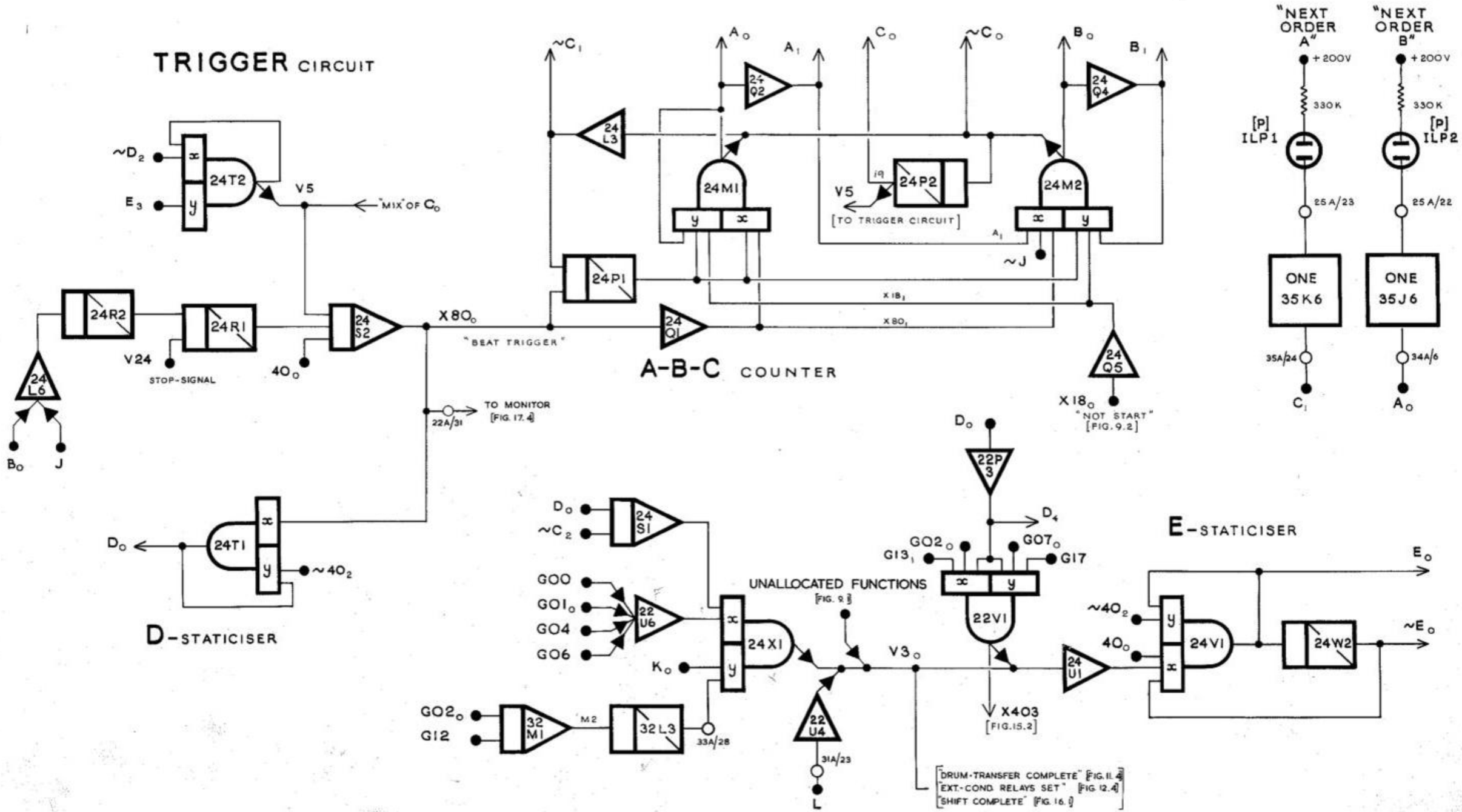

FIG. 5.5 BEAT CONTROL [SEE FIG 6.9 FOR REPEATERS ETC.]