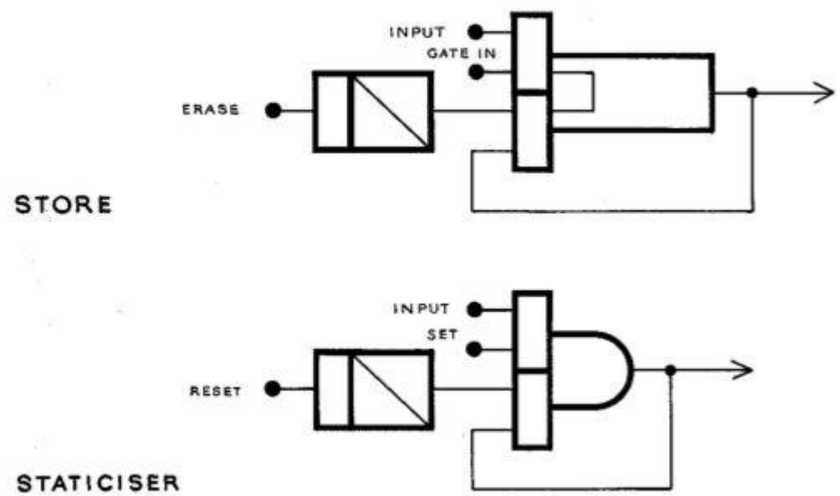

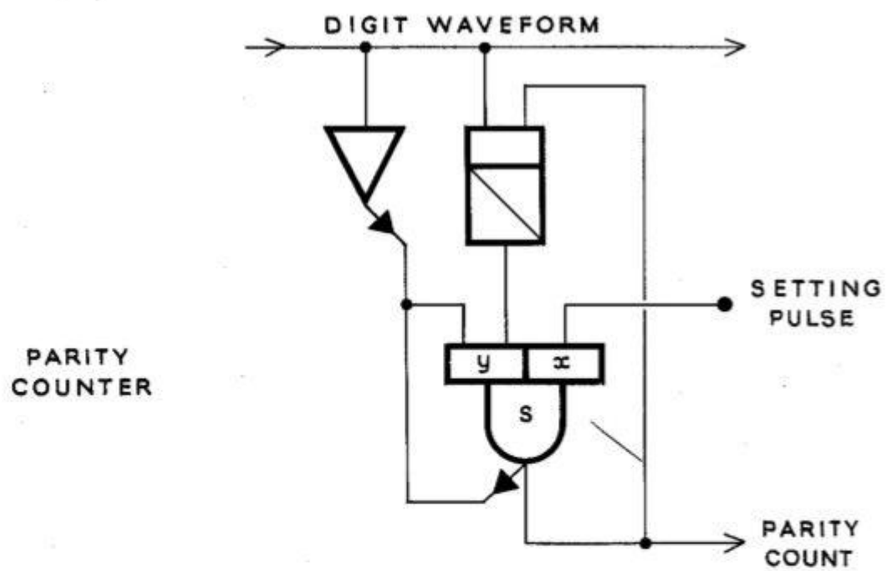

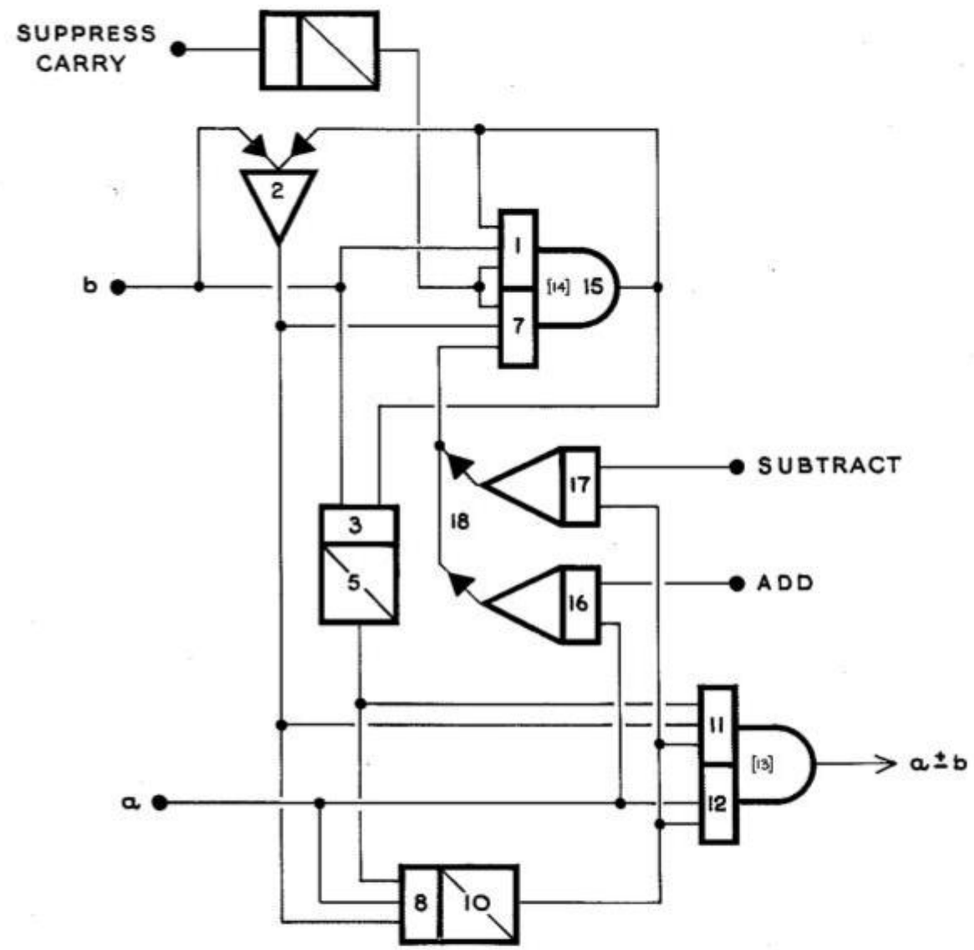

FULL ADDER–SUBTRACTOR WITH FACILITIES FOR CARRY SUPPRESSION

FIG. 3.6 EXAMPLES WITH CONTRACTED SYMBOLS