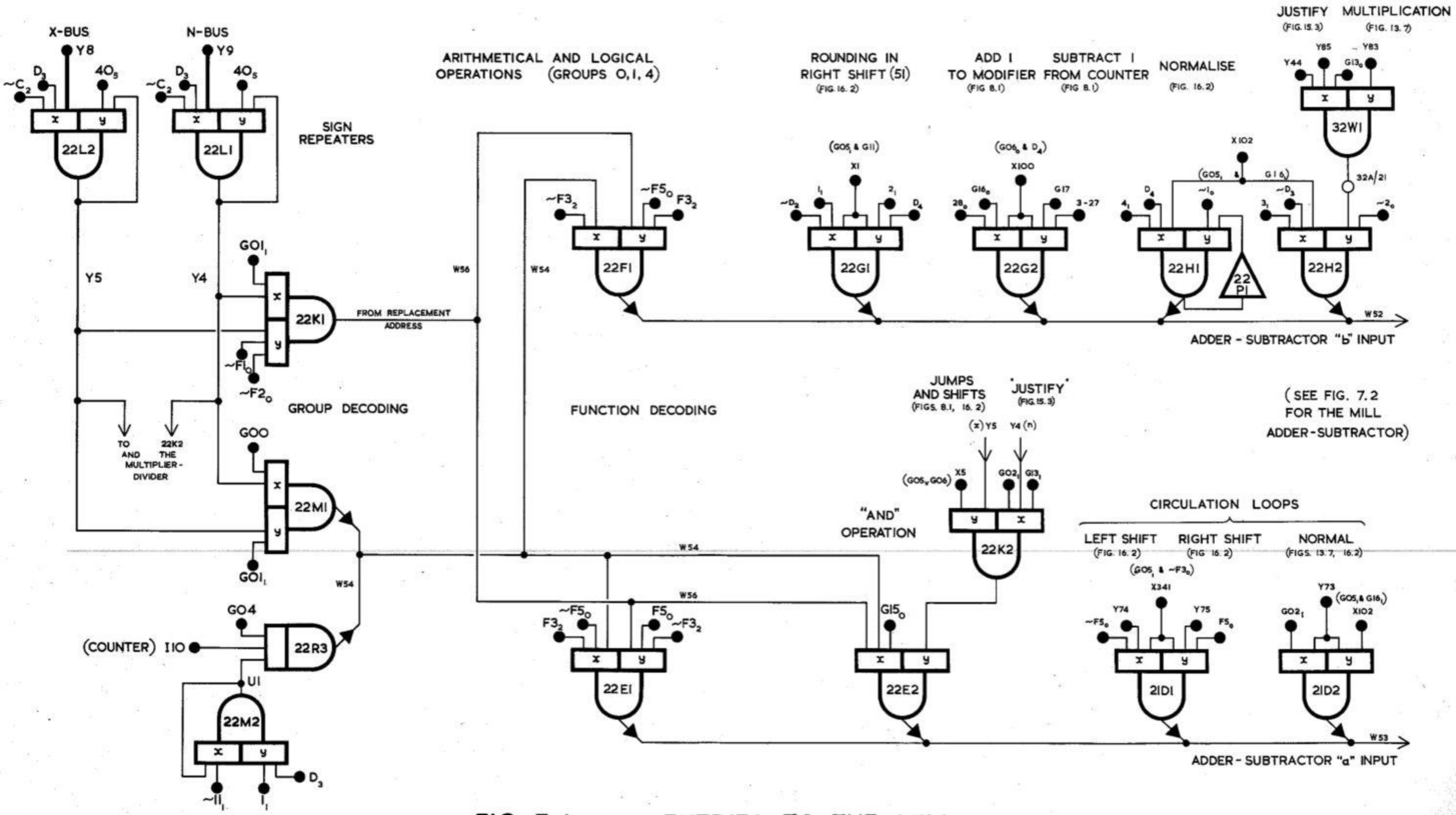

FIG. 7. 1 ENTRIES TO THE MILL