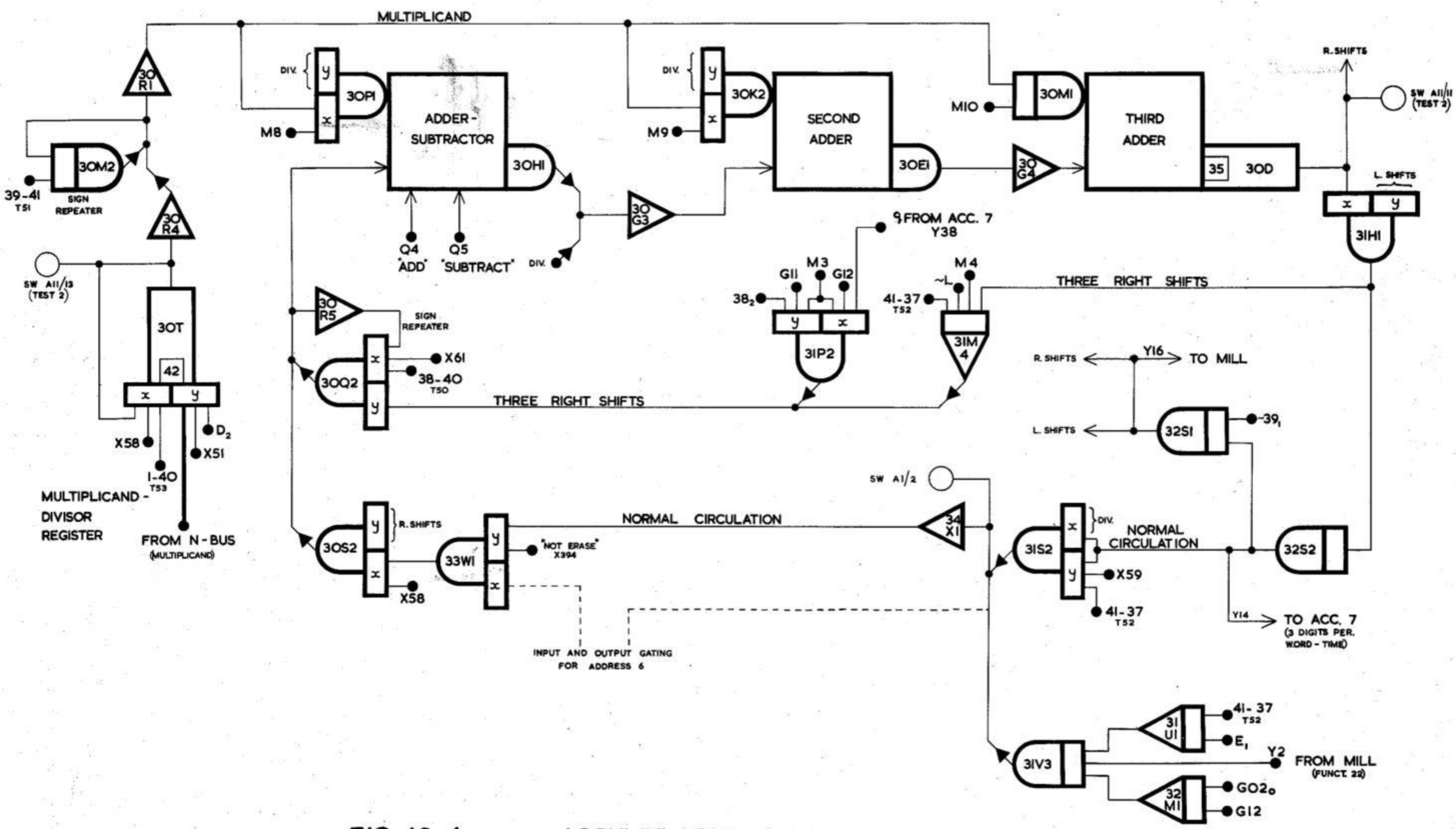

FIG. 13.4 ACCUMULATOR 6 IN MULTIPLICATION.