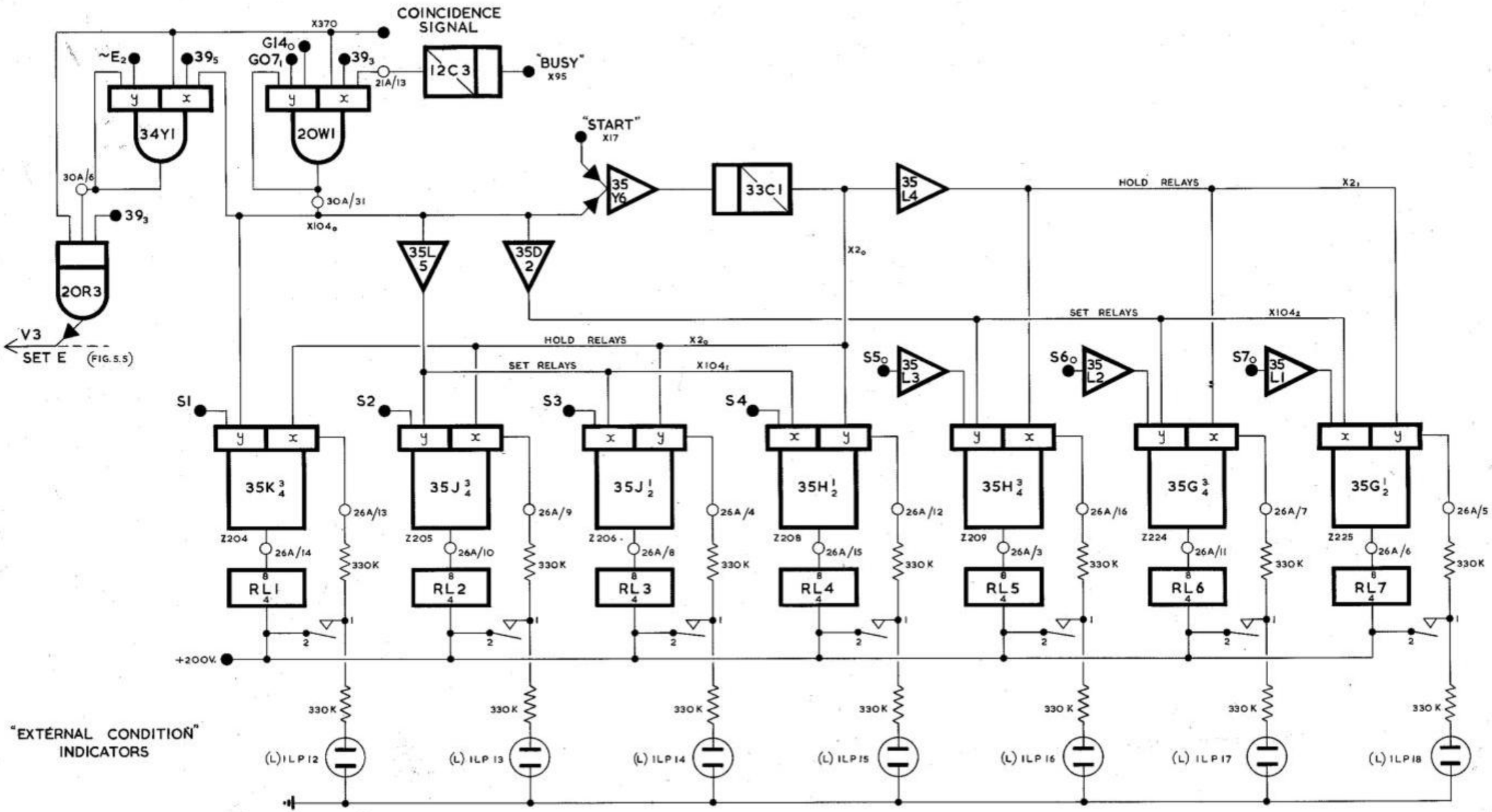

FIG. 12. 4 EXTERNAL - CONDITIONING CIRCUITS