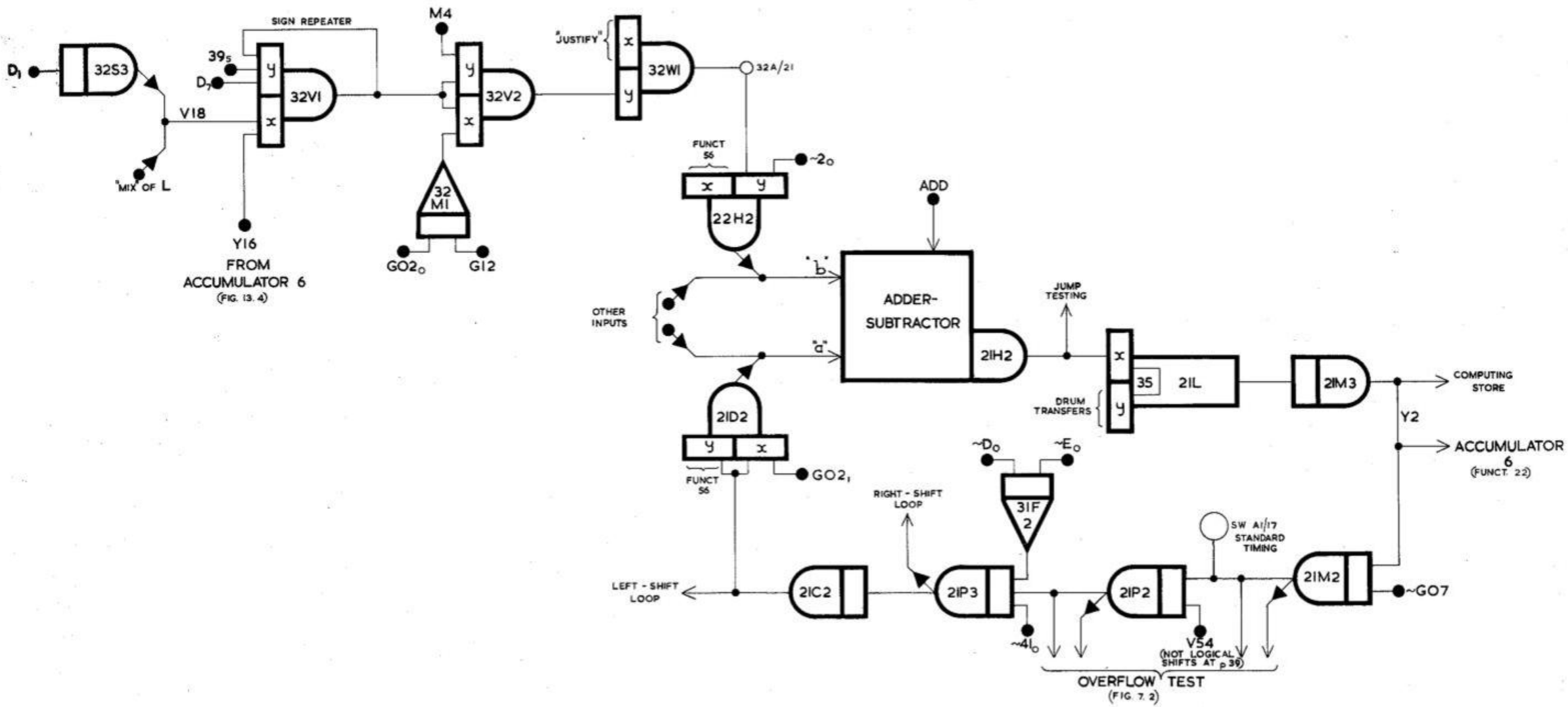

FIG. 13.7 MILL CONNECTIONS FOR MULTIPLICATION