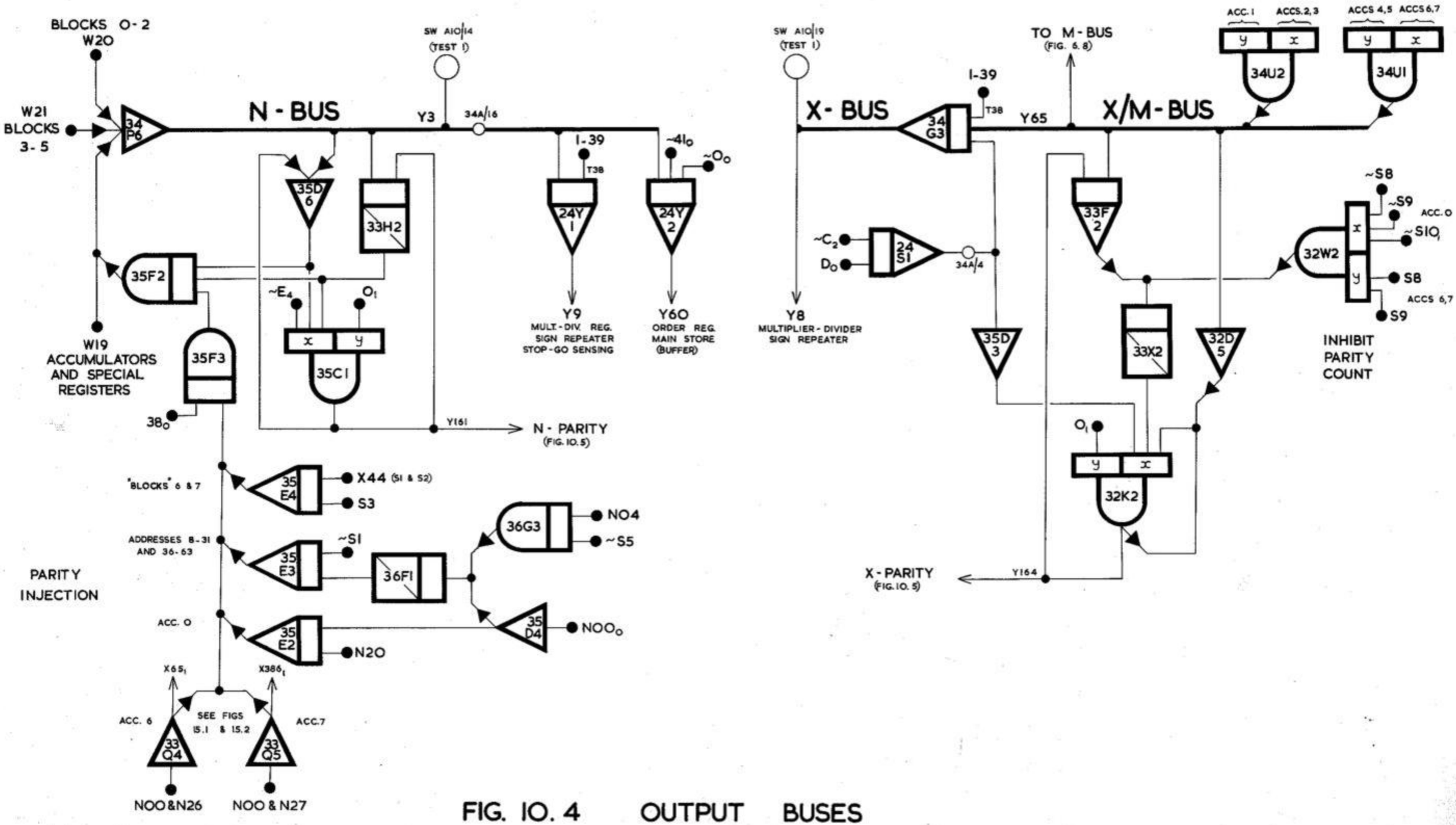

FIG. 10. 4 OUTPUT BUSES