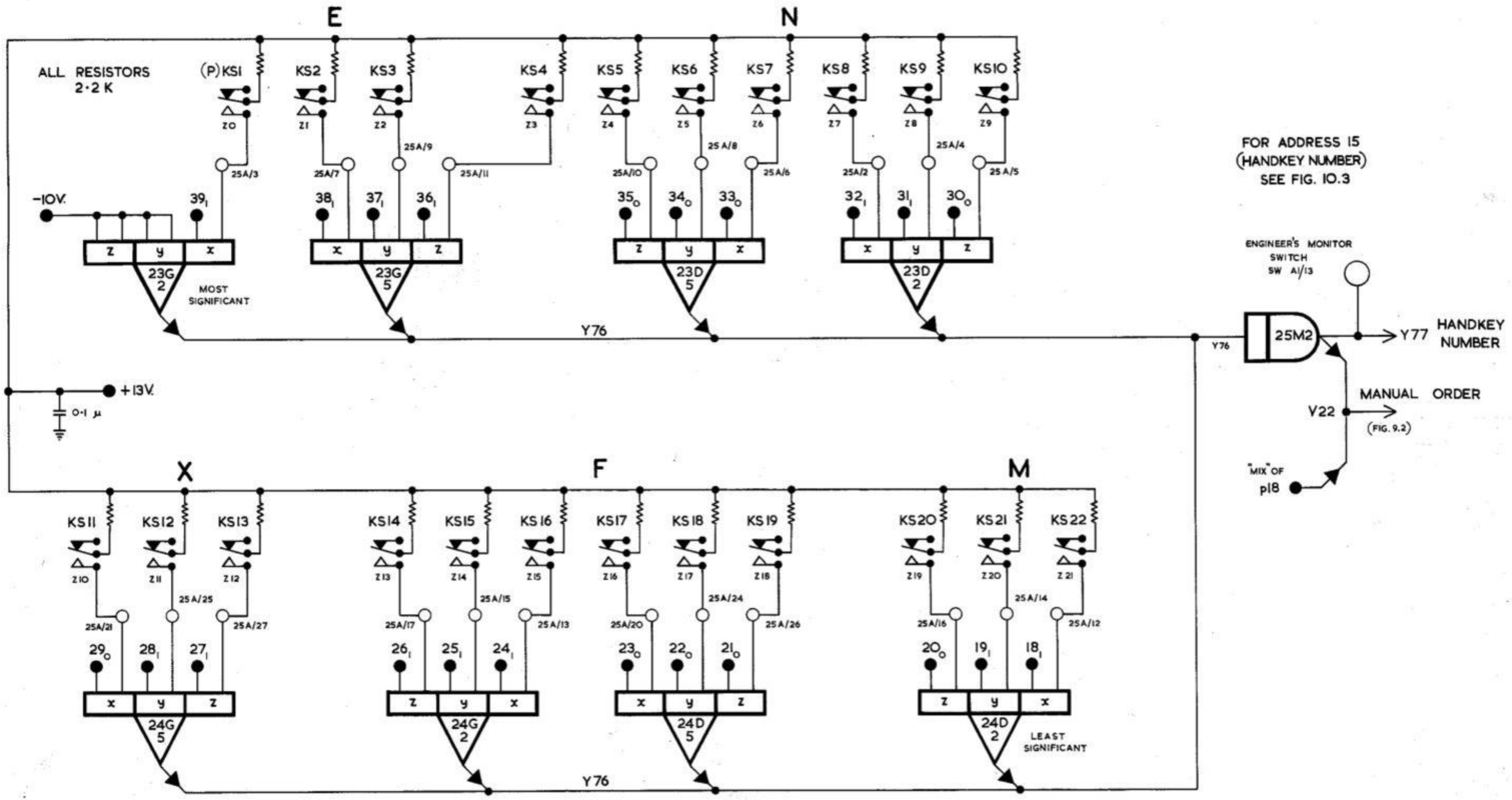

FIG. 9.3 HANDKEY CIRCUIT