BINARY ANNOTATIONS ARE TO BE TAKEN DIGIT BY DIGIT AS TRUTH-TABLE REPRESENTATIONS, NOT SEQUENTIALLY AS BINARY NUMBERS

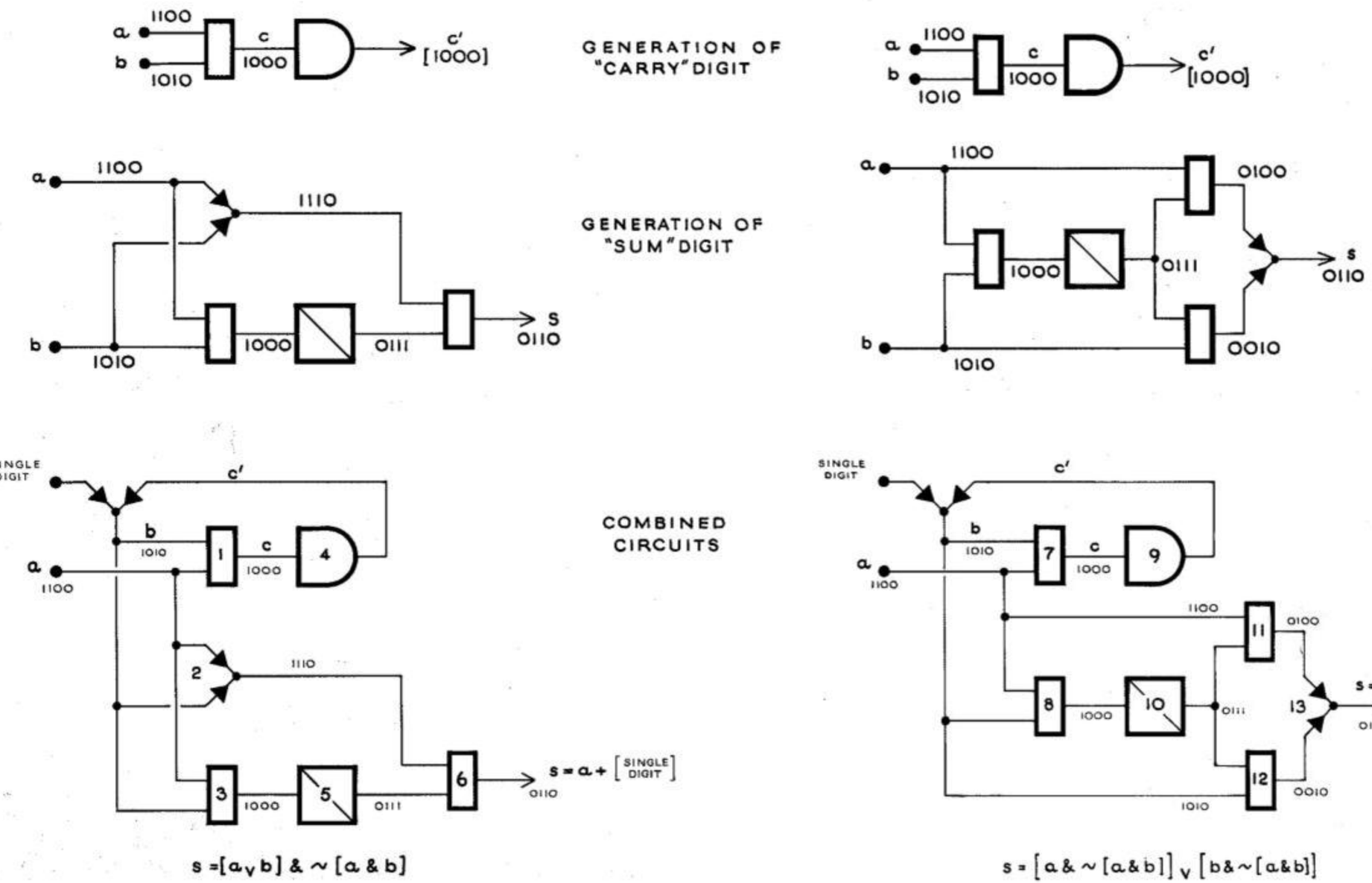

FIG. 3.2 HALF ADDERS