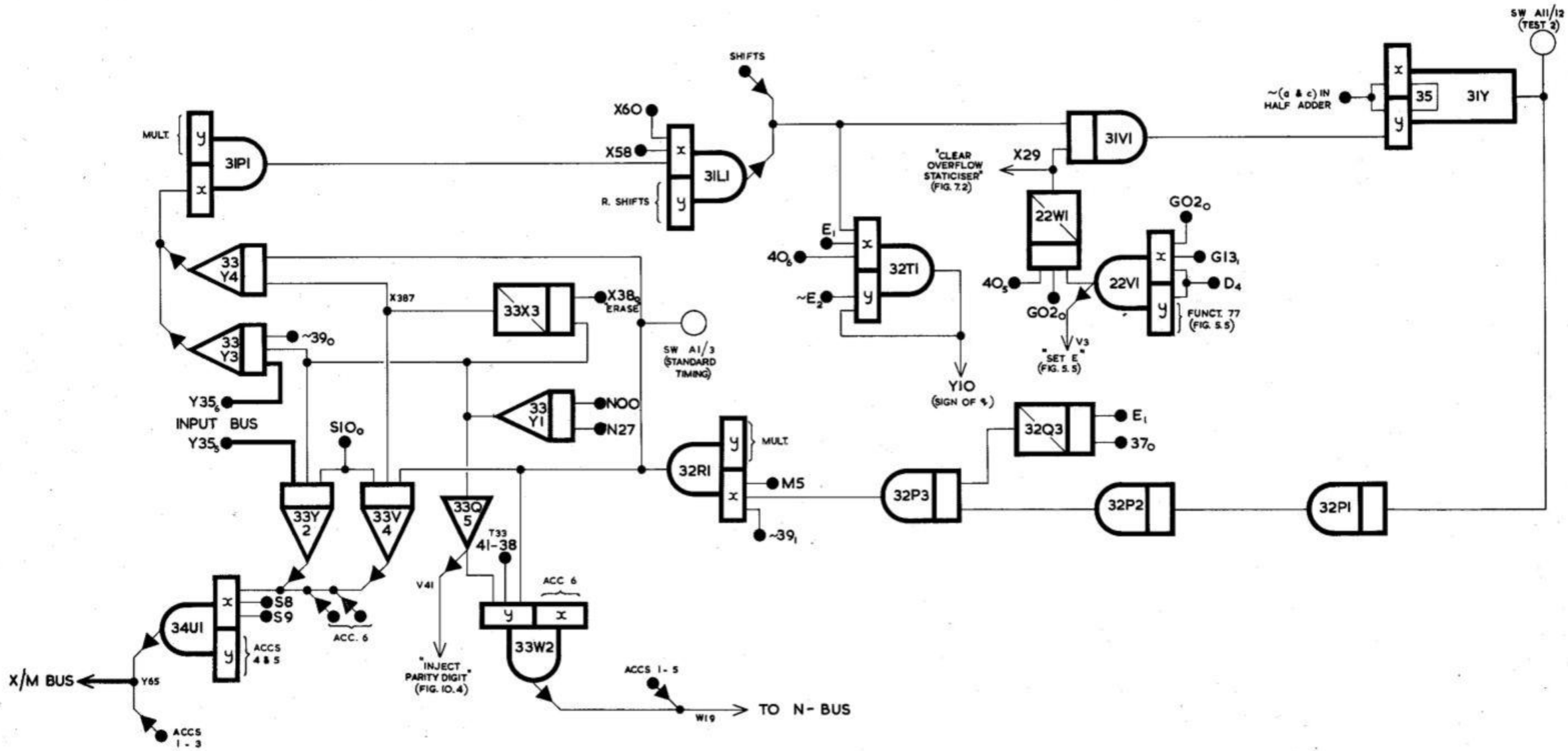

FIG. 15.2 STORAGE IN ADDRESS 7