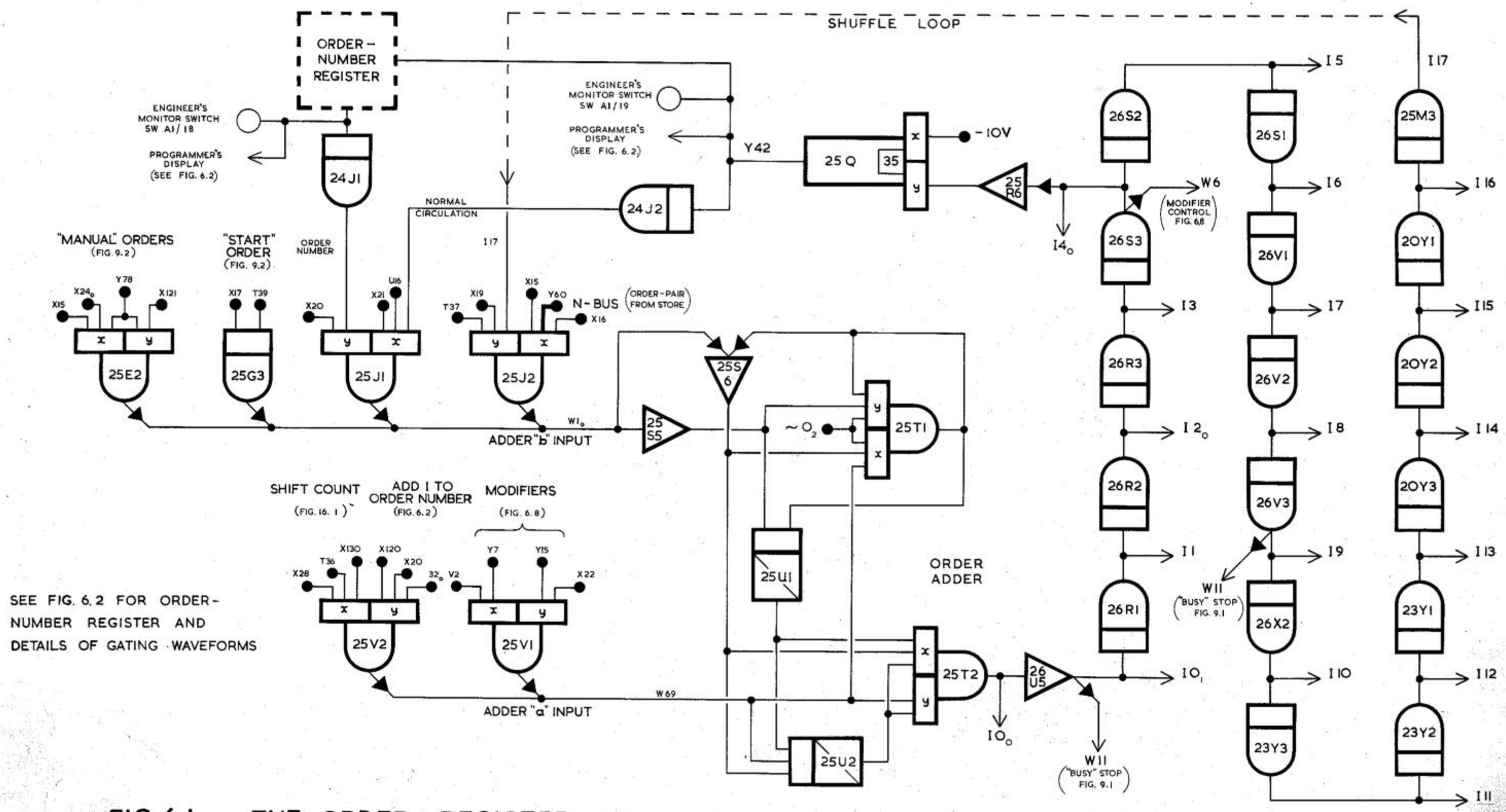

FIG. 6.1 THE ORDER REGISTER.