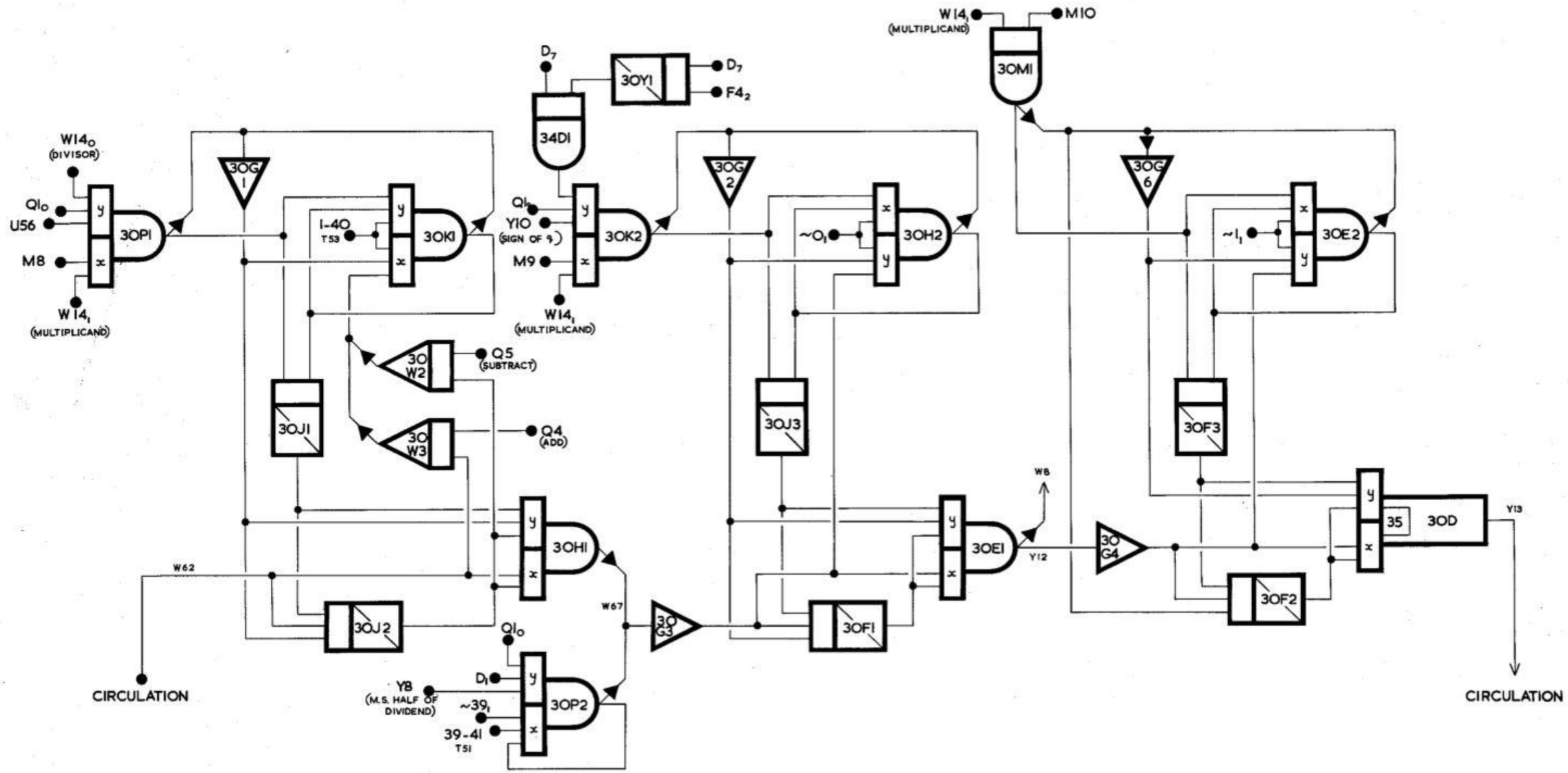

FIG. 13 . 5 ADDER - SUBTRACTOR AND ADDERS IN ACCUMULATOR 6.