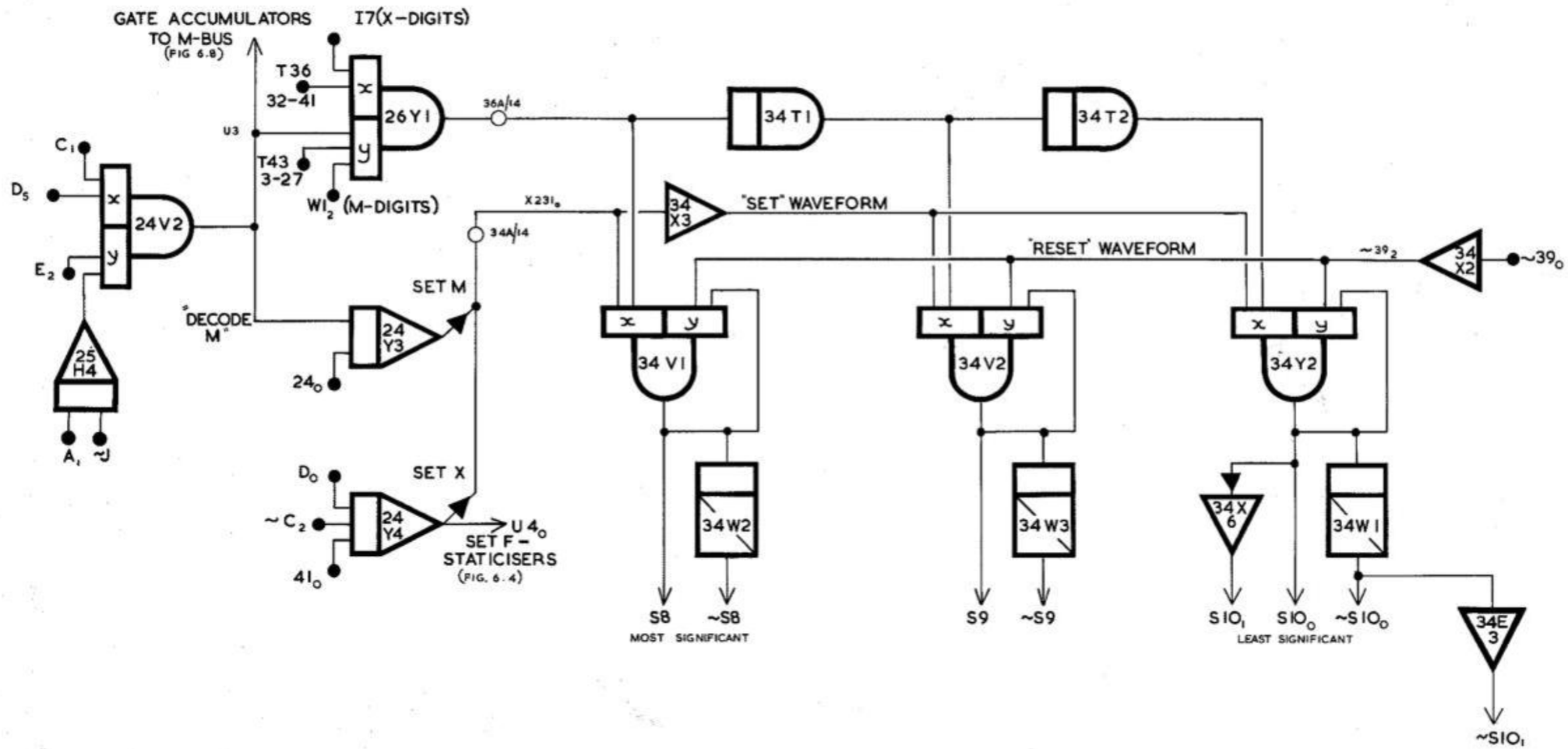

FIG. 6.5 X-DIGIT AND M-DIGIT DECODING