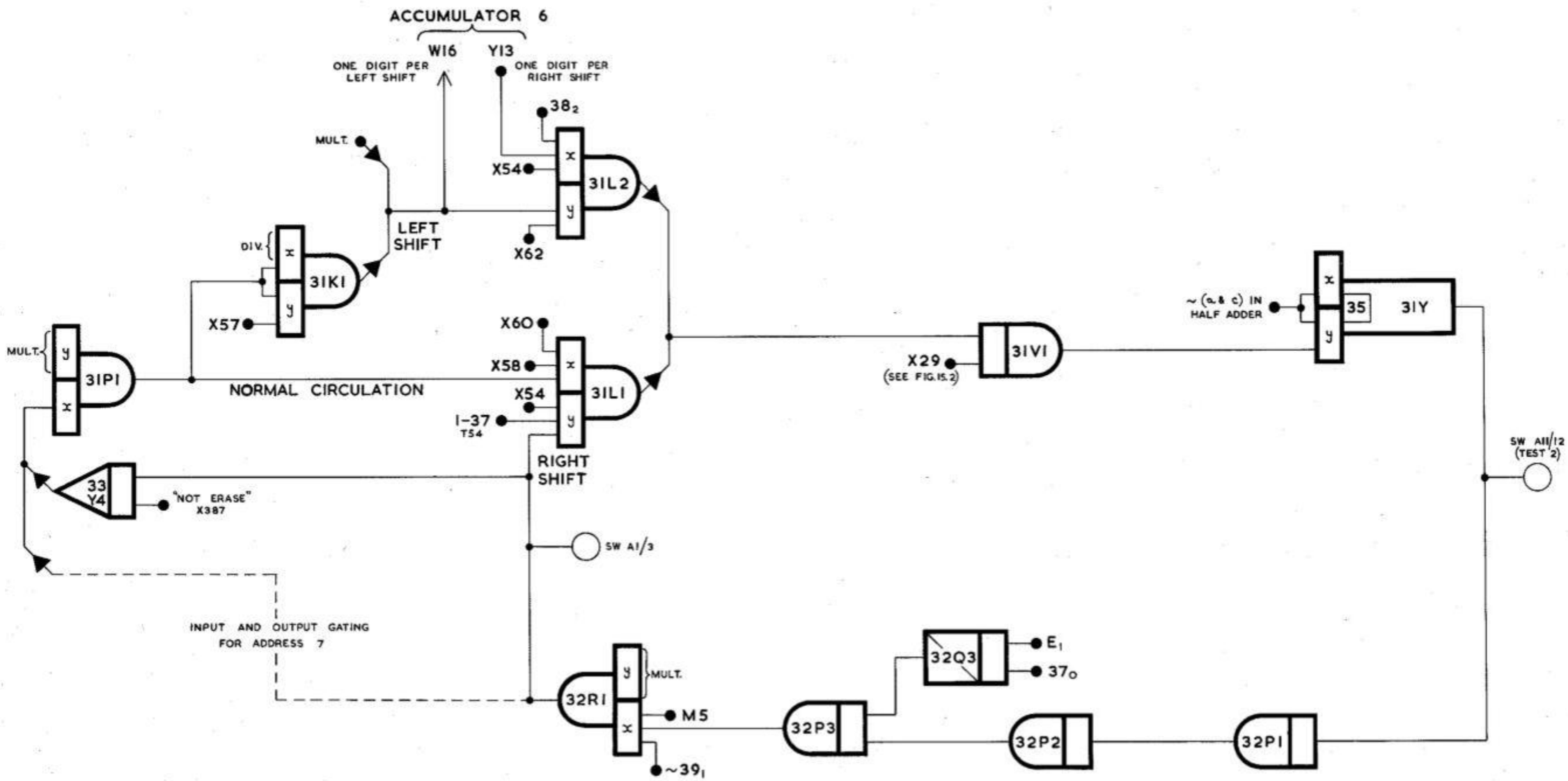

FIG. 16. 5 ACCUMULATOR 7 IN SHIFTS