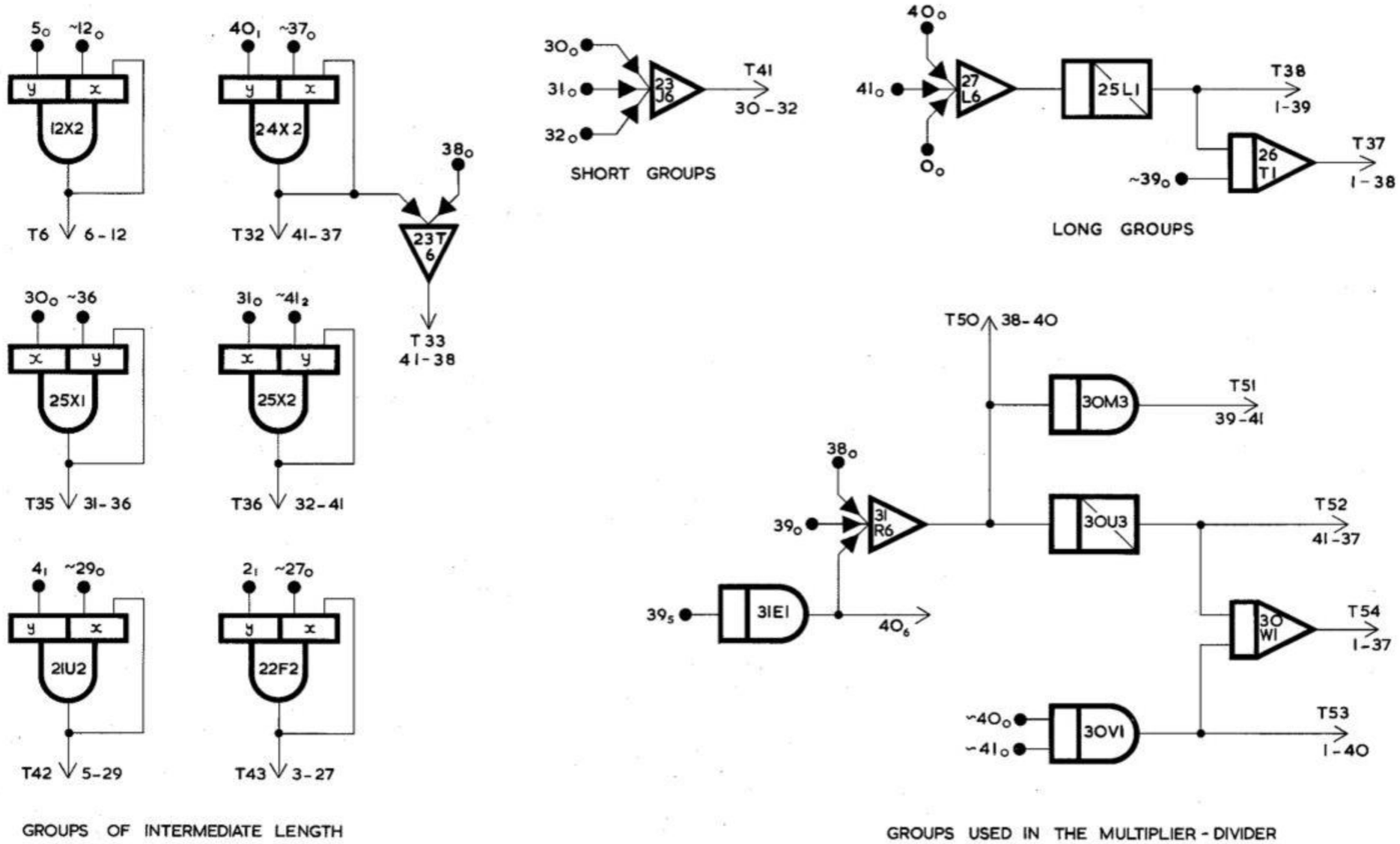

FIG. 5.4 THE GENERATION OF p-PULSE GROUPS.