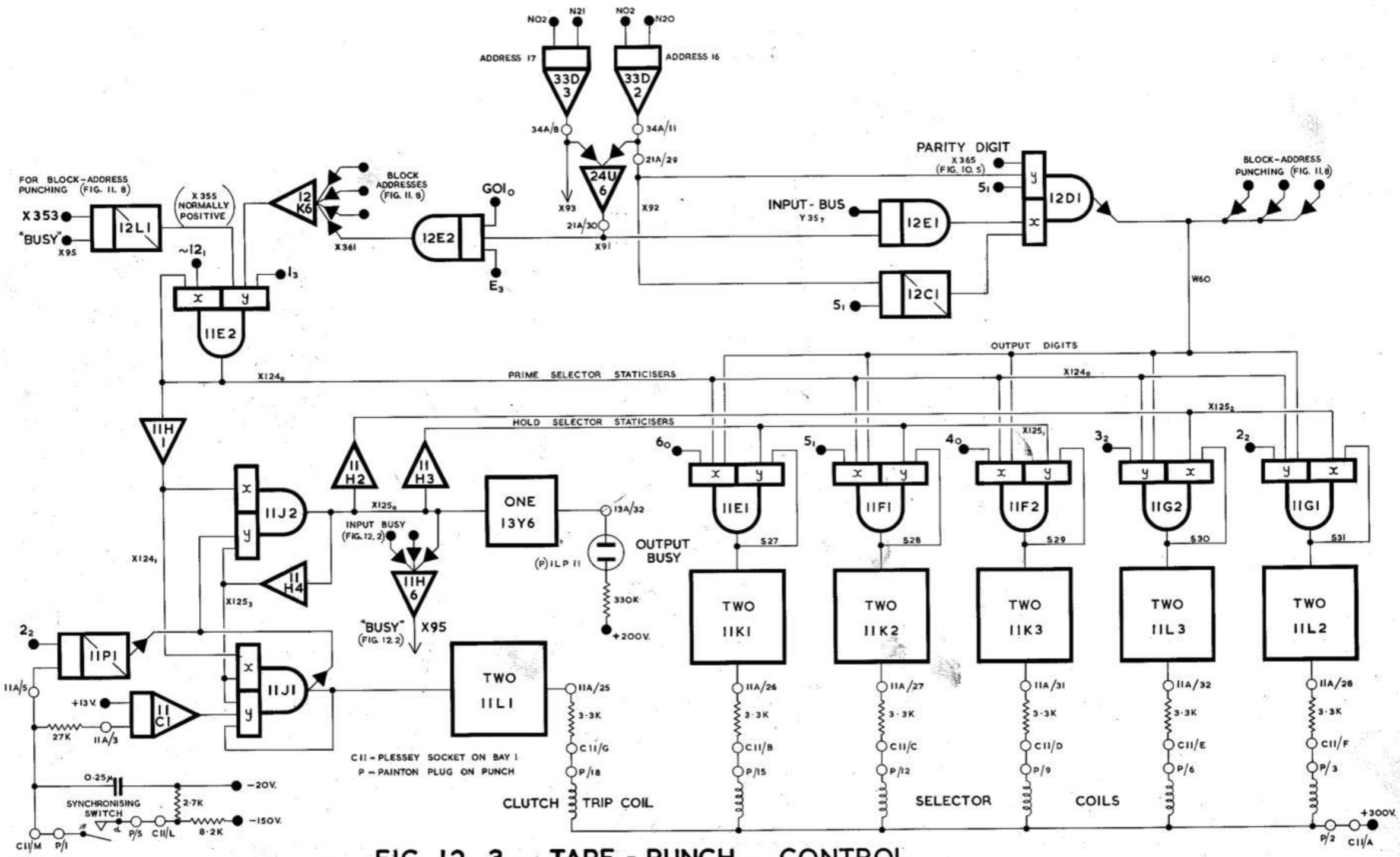

FIG. 12. 3 TAPE - PUNCH CONTROL