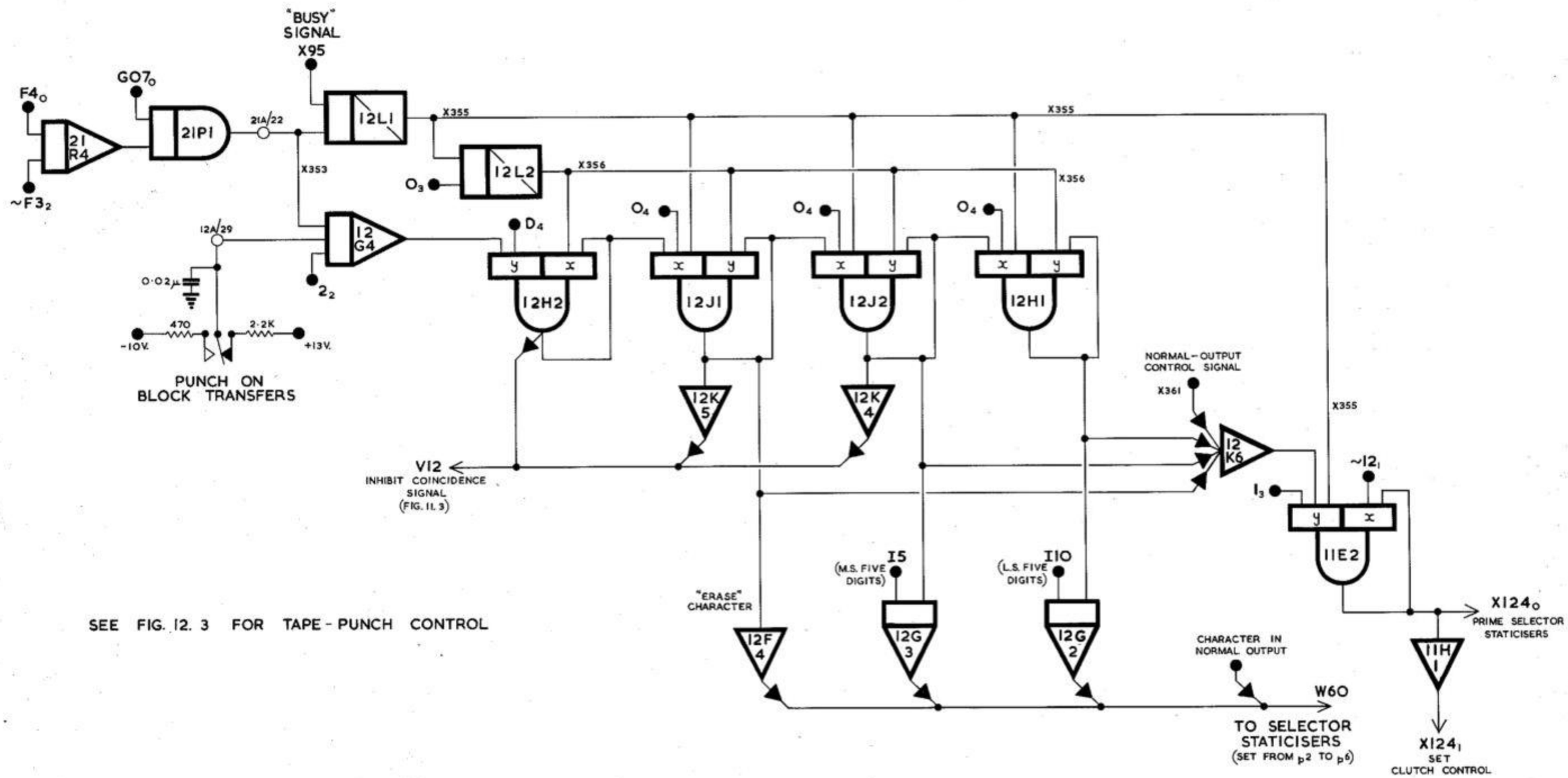

FIG. 11. 8 CONTROL FOR BLOCK-ADDRESS PUNCHING