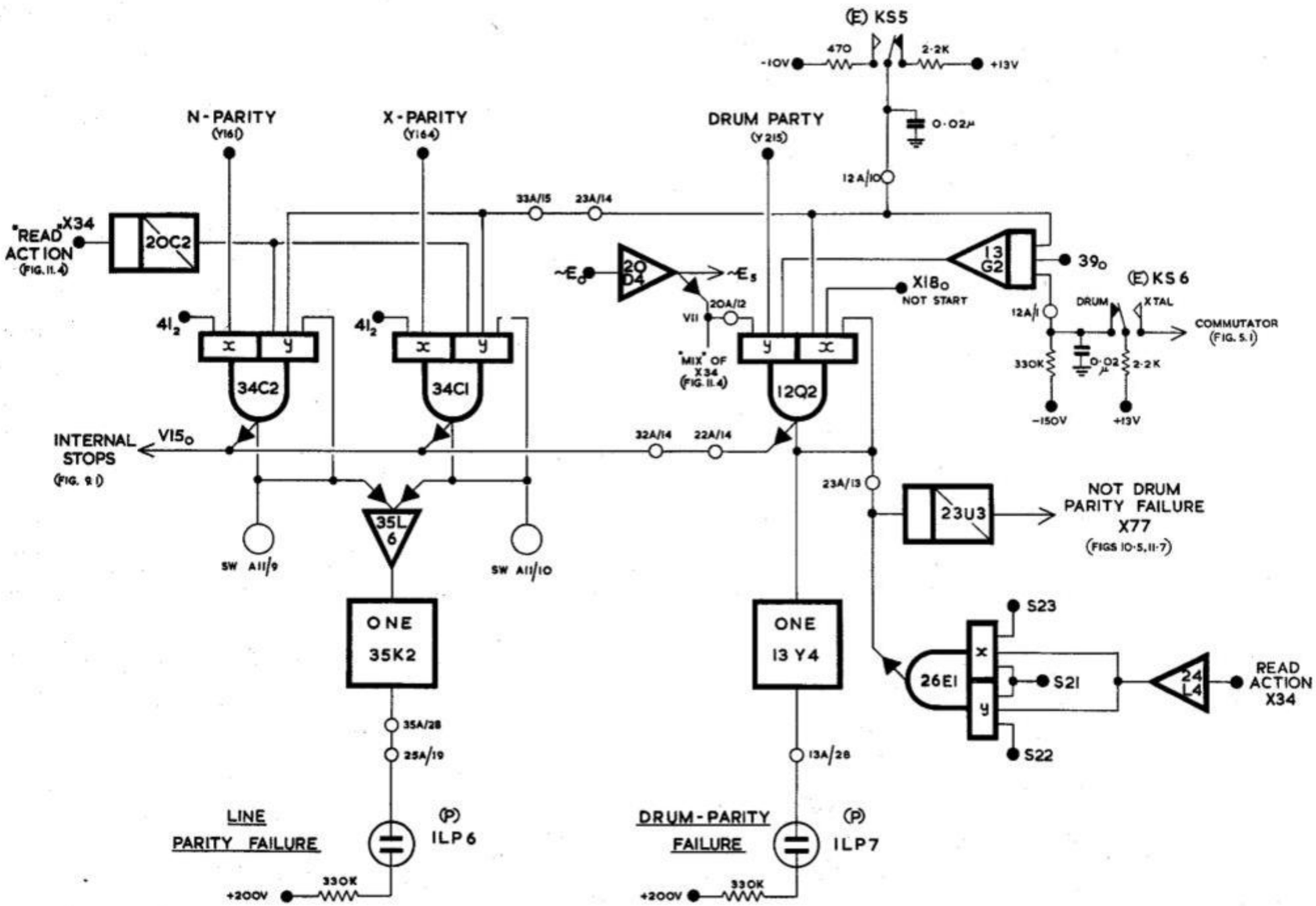

FIG. 10. 6 PARITY STOPS