BINARY ANNOTATIONS ARE TO BE TAKEN DIGIT BY DIGIT AS TRUTH-TABLE REPRESENTATIONS NOT SEQUENTIALLY AS BINARY NUMBERS

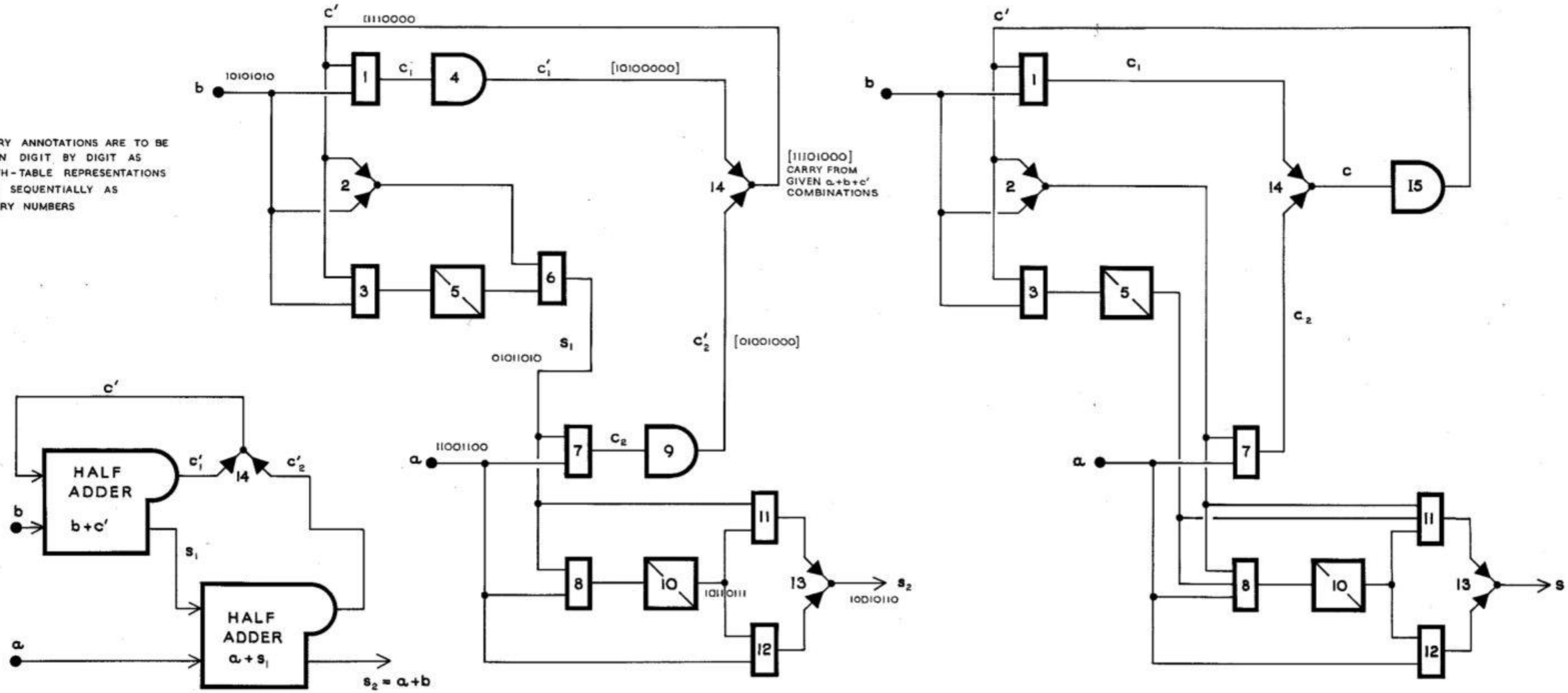

SCHEMATIC

COMBINED HALF-ADDER CIRCUITS

FINAL FORM OF ADDER

FIG. 3.3. FULL ADDER