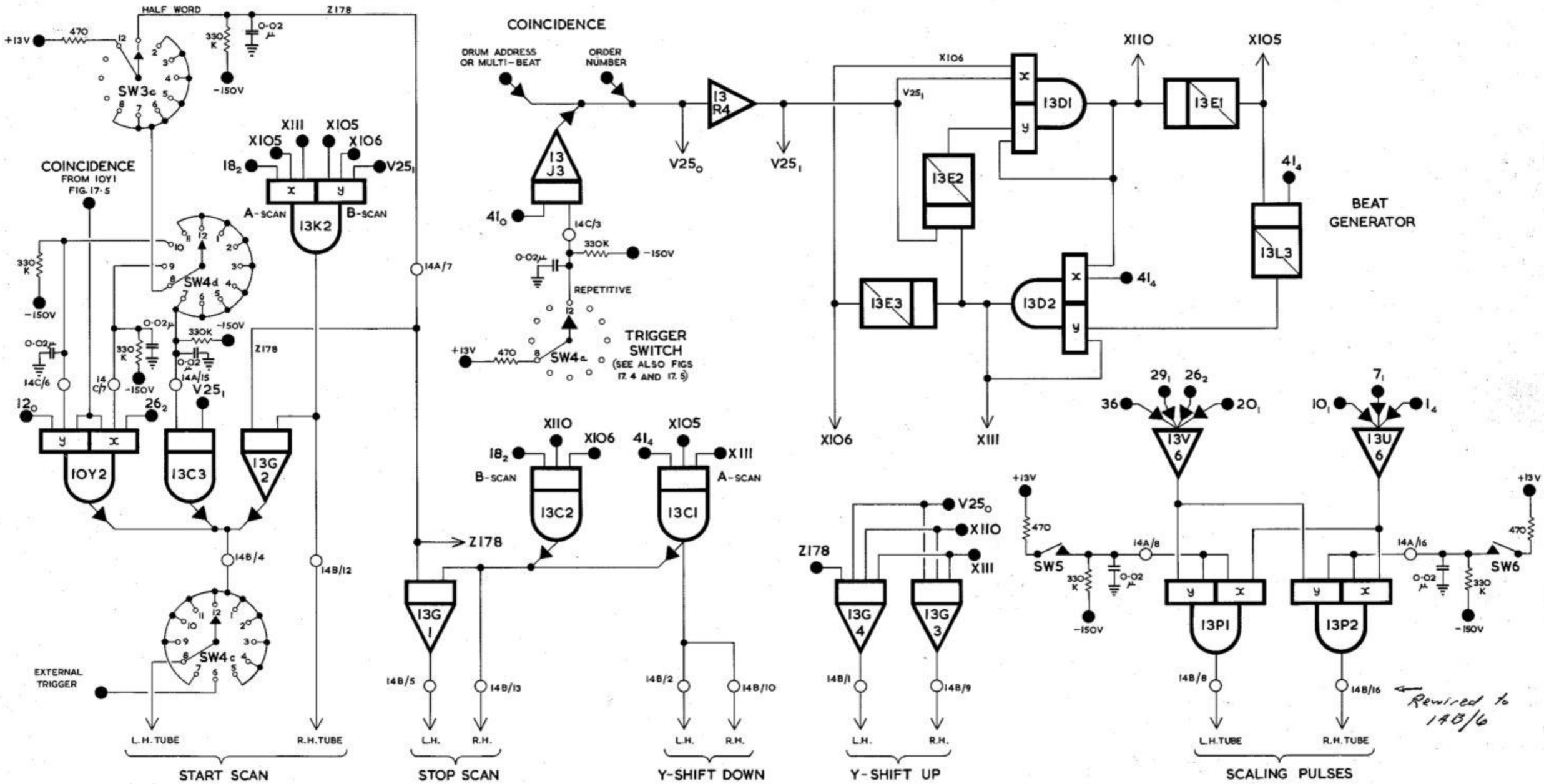

FIG. 17. 3 MONITOR CONTROL CIRCUIT.