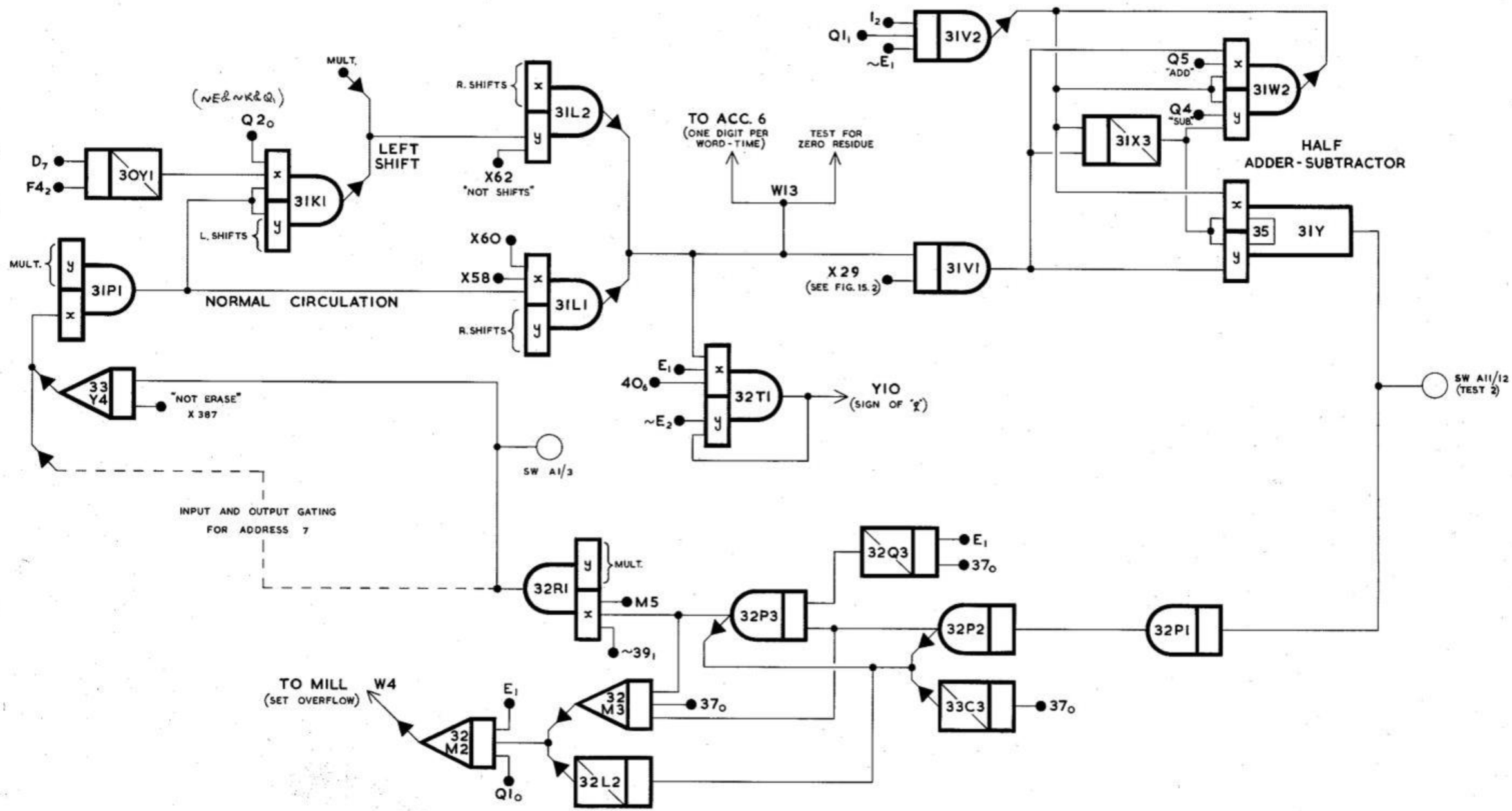

FIG. 14.4 ACCUMULATOR 7 IN DIVISION