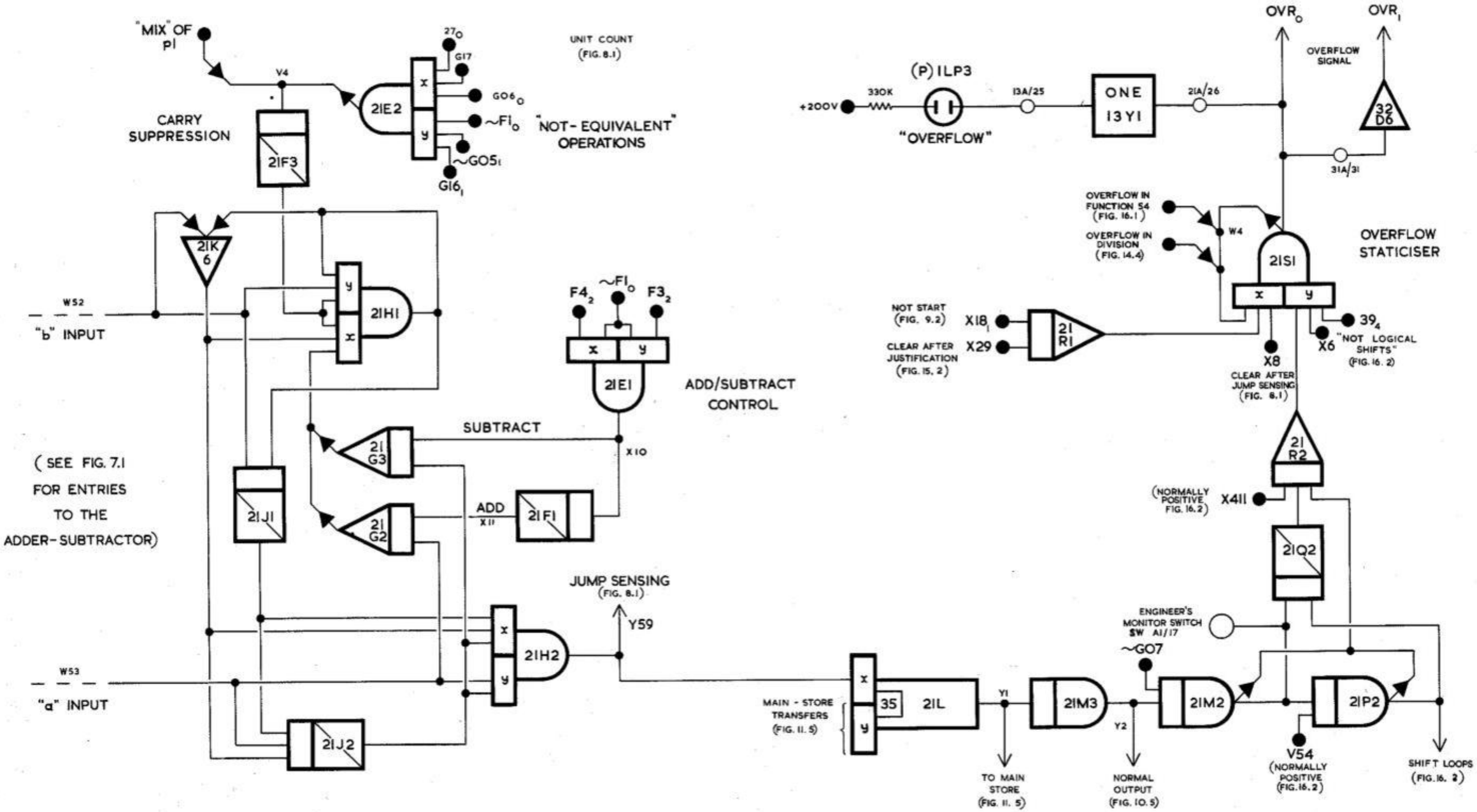

FIG. 7.2 THE MILL ADDER-SUBTRACTOR AND OVERFLOW SENSING